SECURITIES & EXCHANGE COMMISSION OF PAKISTAN

INTERIOR RENOVATION BUSINESS CENTER SECP CRO 3RD FLOOR ASSOCIATED HOUSE, EGERTON ROAD, LAHORE RENOVATION

TENDER DRAWINGS

VOLUME-III

SOHAIL A. KHAN ASSOCIATES
Architecture and Designing
House #159, Street 4, Race Course Road, Rawalpindi
Tel: 5174329 - 5174098; Fax: 5125075
Email: mail@saka.net.pk

ARCHITECTURE

SOHAIL A. KHAN ASSOCIATES
Architecture and Designing
House #159, Street 4, Race Course Road, Rawalpindi
Tel: 5174329 - 5174098; Fax: 5125075
Email: mail@saka.net.pk

LIST OF DRAWINGS

ARCHITECTURAL

DRG. NO:	TITLE
A-01	3RD FLOOR DEMOLITION PLAN
A-02	3RD FLOOR FURNITURE PLAN
A-03	3RD FLOOR 3D VIEWS
A-03a	3RD FLOOR 3D VIEWS
A-04	3RD FLOOR WORKING PLAN
A-05	3RD FLOOR FLOORING PLAN
A-06	3RD FLOOR FALSE CEILING PLANE
A-07	3RD FLOOR FALSE CEILING DETAIL BLOWUP
A-08	3RD FLOOR FALSE CEILING DETAIL BLOWUP
A-09	SECTION AT ('A' & A1)
A-9a	SECTION AT ('A3')
A-10	SECTION AT ('B' & B1)
A-11	SECTION AT ('C' & C1)
A-12	SECTION AT ('D' & D1)
A-13	SECTION DETAILS
A-14	DOOR DETAILS
A-15	SELF SERVICE COUNTERS DETAIL
A-16	INCORPORATION TABLE DETAIL
A-17	GYPSUM & CEMENT BOARD PARTITION DETAIL
A-18	PLYWOOD PARTITION DETAIL
A-19	OFFICERS TABLE PARTITION DETAIL
A-20	WINDOWS GRILL PLAN SECTION & ELEVATION
A-21	TYPICAL DETAIL FOR COLUMN
A-22	FACILITATION COUNTER AND LOW HEIGHT FILE CABINET DETAIL
A-23	FACILITATION COUNTER AND LOW HEIGHT FILE CABINET DETAIL
A-24	FACILITATION COUNTER AND LOW HEIGHT FILE CABINET DETAIL

ELECTRICAL DRAWINGS

DRG. NO:	TITLE
E-01	MAIN LEGEND
E-02	GENERAL WIRING NOTES, TENTATIVE CONSTRUCTIONAL DETAIL OF DISTRIBUTION BOARD, TECHNOLOGY, FLOOR BOX AND EARTHING DETAIL
E-03	CEILING CO-ORDINATION LAYOUT
E-04	ILLUMINATION LAYOUT PLAN
E-05	EMERGENCY & EXIT LIGHT LAYOUT PLAN
E-06	POWER SOCKETS LAYOUT PLAN ON NORMAL SUPPLY
E-07	POWER SOCKETS LAYOUT PLAN ON UPS SUPPLY
E-08	DATA & WIFI SYSTEM LAYOUT
E-09	TELEPHONE & TV CABLE SYSTEM LAYOUT
E-10	ACCESS CONTROL & Q-MATIC SYSTEM LAYOUT
E-11	FIRE ALARM & CCTV SYSTEM LAYOUT

HVAC DRAWINGS

DRG. NO:	TITLE
HV-00	HVAC INDEX-LEGEND AND GENERAL NOTES
HV-01	AC COPPER LAYOUT 3RD FLOOR
HV-02	AC COPPER LAYOUT ROOF PLAN
HV-03	ELECTRICAL SYSTEM LAYOUT 3RD FLOOR PLAN
HV-04	HVAC CONDENSATE LAYOUT 3RD FLOOR PLAN
HV-05	HVAC STANDARD DETAILS

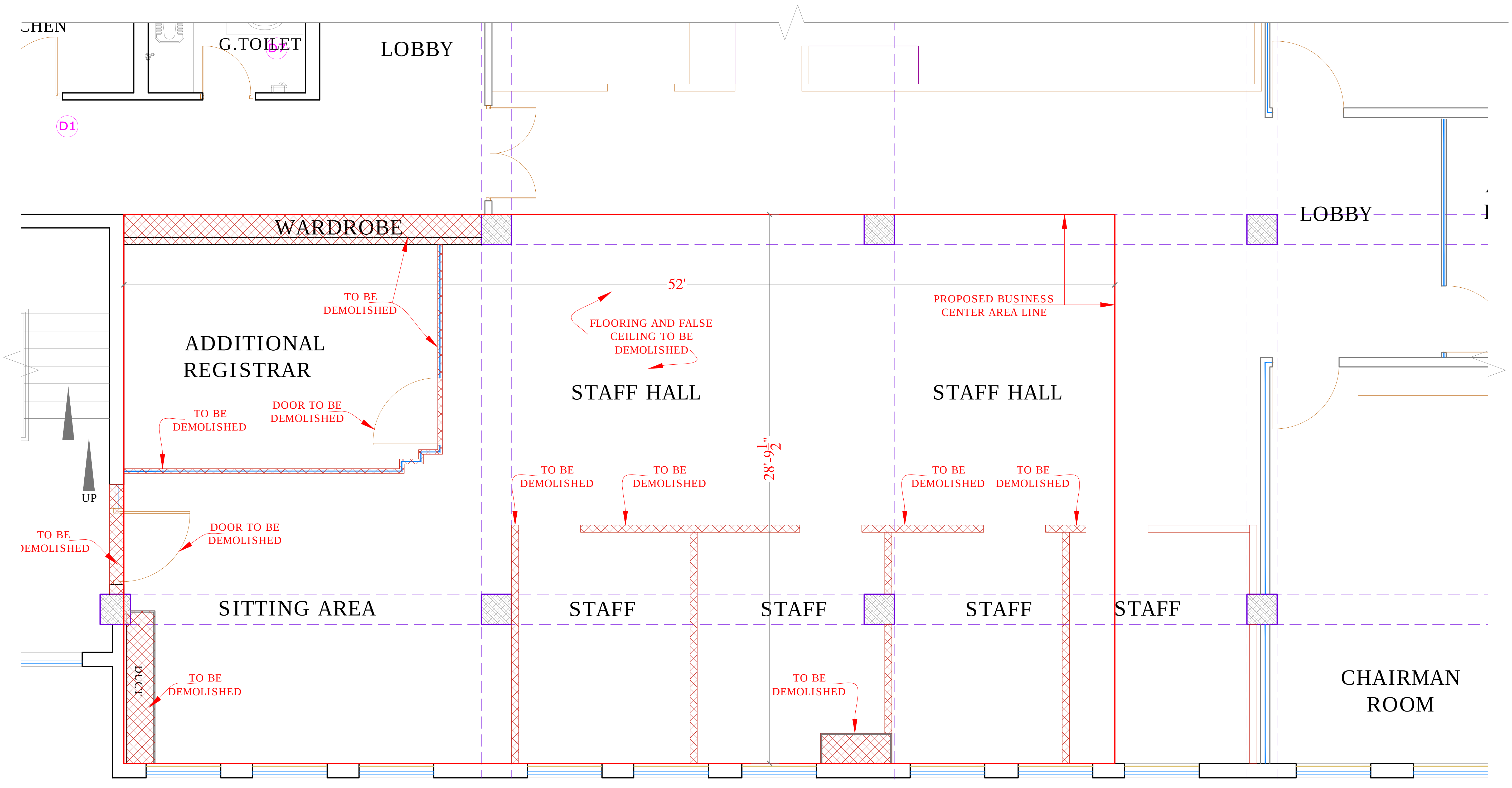

3rd FLOOR DEMOLITION PLAN

NOTE:

DIMENSIONS MAY VARY AS PER SITE
CONTRACTOR NEEDS TO CO ORDINATES
IN CASE OF ANY DISCREPANCY

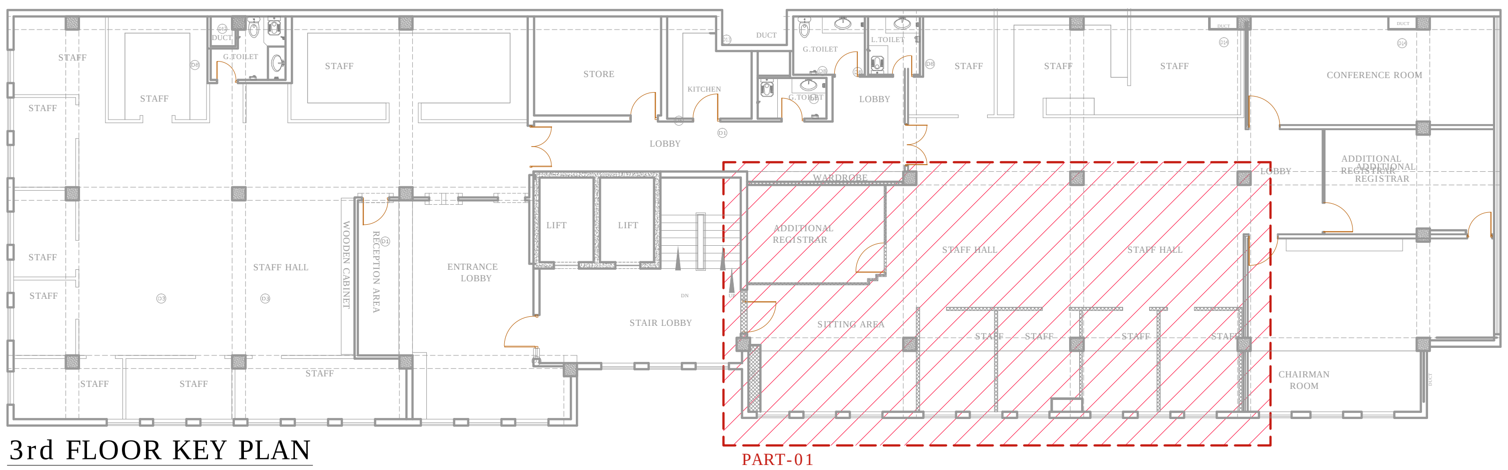

3rd FLOOR KEY PLAN

REV.	DATE	DESCRIPTION	BY	CHD	APP

CLIENT SECURITIES AND EXCHANGE COMMISSION OF PAKISTAN		
PROJECT INTERIOR RENOVATION BUSINESS CENTER SECP CRO 3RD FLOOR LAHORE		
DESIGN PHASE TENDER DRAWINGS		
TITLE DEMOLISH PLAN		
DESIGN SHAZIA QURESHI	DRAWN WASIM BUTT	SCALE AS SHOWN
CHECKED SHAZIA QURESHI	APPROVED SHAZIA QURESHI	DATE 24 Dec, 2020
NORTH	JOB No. A- 2125	
	DRG. No. A-01	

CONSULTANT:
SOHAIL A. KHAN ASSOCIATES
Architecture and Designing
House #159, Street 4, Race Course Road, Rawalpindi
Tel: 5174329 - 5174098; Fax: 5125075
Email: mail@saka.net.pk

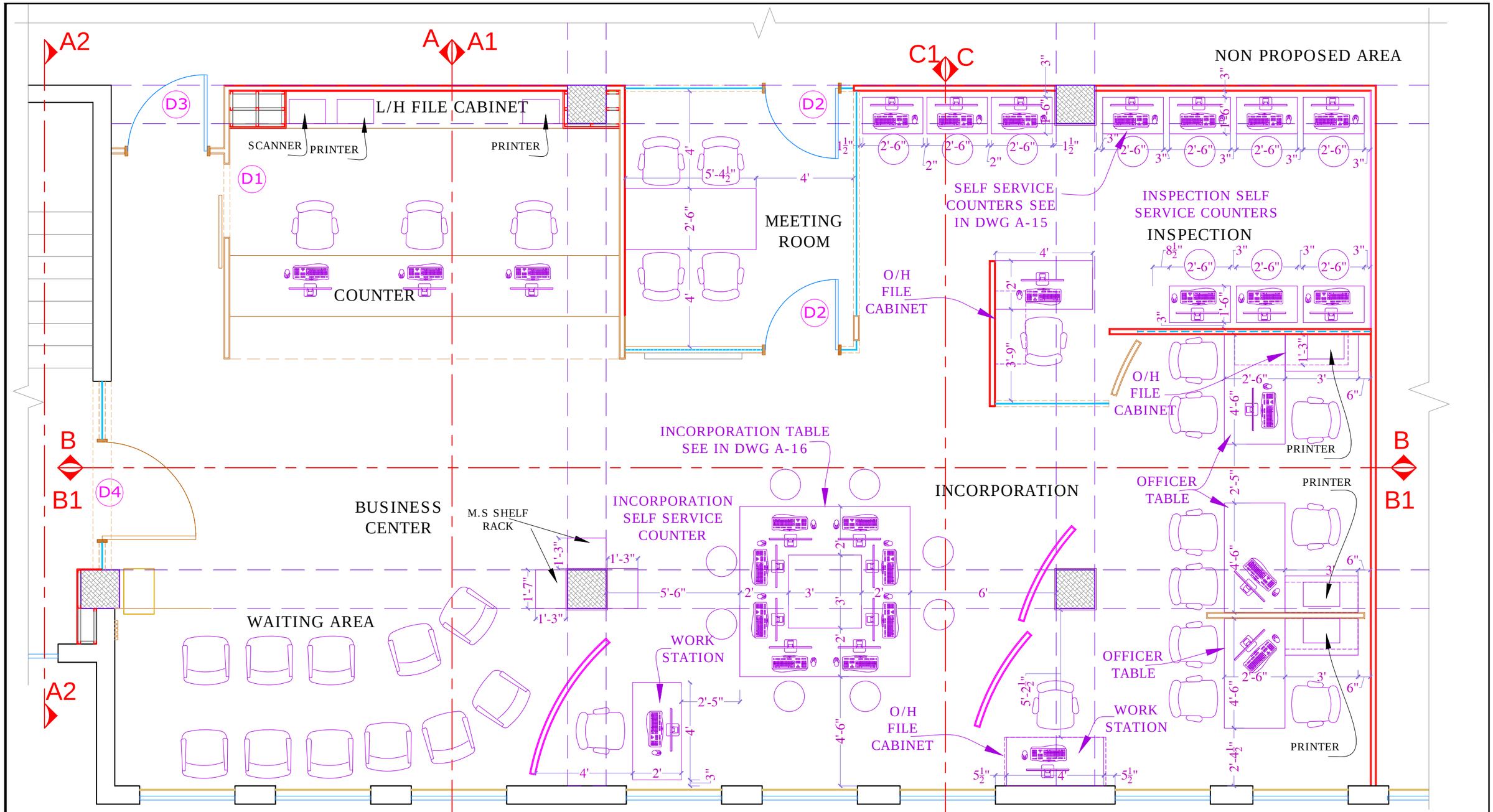

3rd FLOOR FURNITURE PLAN

NOTE:

DIMENSIONS MAY VARY AS PER SITE
CONTRACTOR NEEDS TO CO ORDINATES
IN CASE OF ANY DISCREPANCY

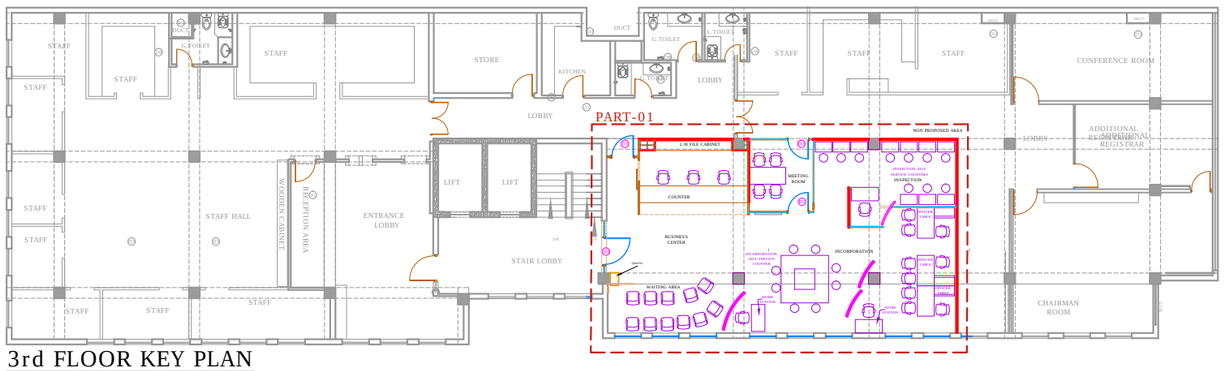

3rd FLOOR KEY PLAN

REV.	DATE	DESCRIPTION	BY	CHD	APP

CLIENT
SECURITIES AND EXCHANGE COMMISSION OF PAKISTAN

PROJECT
INTERIOR RENOVATION BUSINESS CENTER SECP CRO 3RD FLOOR LAHORE

DESIGN PHASE
TENDER DRAWINGS

TITLE
FURNITURE PLAN

DESIGN	DRAWN	SCALE
SHAZIA QURESHI	WASIM BUTT	AS SHOWN
CHECKED	APPROVED	DATE
SHAZIA QURESHI	SHAZIA QURESHI	24 Dec, 2020
NORTH	JOB No. A- 2125	
	DRG. No. A-02	

CONSULTANT:
SOHAIL A. KHAN ASSOCIATES
Architecture and Designing
House #159, Street 4, Race Course Road, Rawalpindi
Tel: 5174329 - 5174098; Fax: 5125075
Email: mail@saka.net.pk

BUSINESS CENTER FACILITATION COUNTER 3D VIEW-01

BUSINESS CENTER FACILITATION COUNTER 3D VIEW-02

REV.	DATE	DESCRIPTION	BY	CHD	APP

CLIENT
SECURITIES AND EXCHANGE COMMISSION OF PAKISTAN

PROJECT
INTERIOR RENOVATION BUSINESS CENTER SECP CRO 3RD FLOOR LAHORE

DESIGN PHASE
TENDER DRAWINGS

TITLE
3DVIEWS

DESIGN	DRAWN	SCALE
SHAZIA QURESHI	WASIM BUTT	AS SHOWN
CHECKED	APPROVED	DATE
SHAZIA QURESHI	SHAZIA QURESHI	24 Dec, 2020
NORTH	JOB No. A- 2125	
	DRG. No. A-03	

CONSULTANT:
SOHAIL A. KHAN ASSOCIATES
Architecture and Designing
House #159, Street 4, Race Course Road, Rawalpindi
Tel: 5174329 - 5174098; Fax: 5125075
Email: mail@saka.net.pk

INCORPORATION VIEW-03

INCORPORATION VIEW-04

INSPECTION AREA VIEW-05

REV.	DATE	DESCRIPTION	BY	CHD	APP

CLIENT
SECURITIES AND EXCHANGE COMMISSION OF PAKISTAN

PROJECT
INTERIOR RENOVATION BUSINESS CENTER SECP CRO 3RD FLOOR LAHORE

DESIGN PHASE
TENDER DRAWINGS

TITLE
3DVIEWS

DESIGN	DRAWN	SCALE
SHAZIA QURESHI	WASIM BUTT	AS SHOWN
CHECKED	APPROVED	DATE
SHAZIA QURESHI	SHAZIA QURESHI	24 Dec, 2020
NORTH	JOB No. A- 2125	
	DRG. No. A-03a	

CONSULTANT:
SOHAIL A. KHAN ASSOCIATES
Architecture and Designing
House #159, Street 4, Race Course Road, Rawalpindi
Tel: 5174329 - 5174098; Fax: 5125075
Email: mail@saka.net.pk

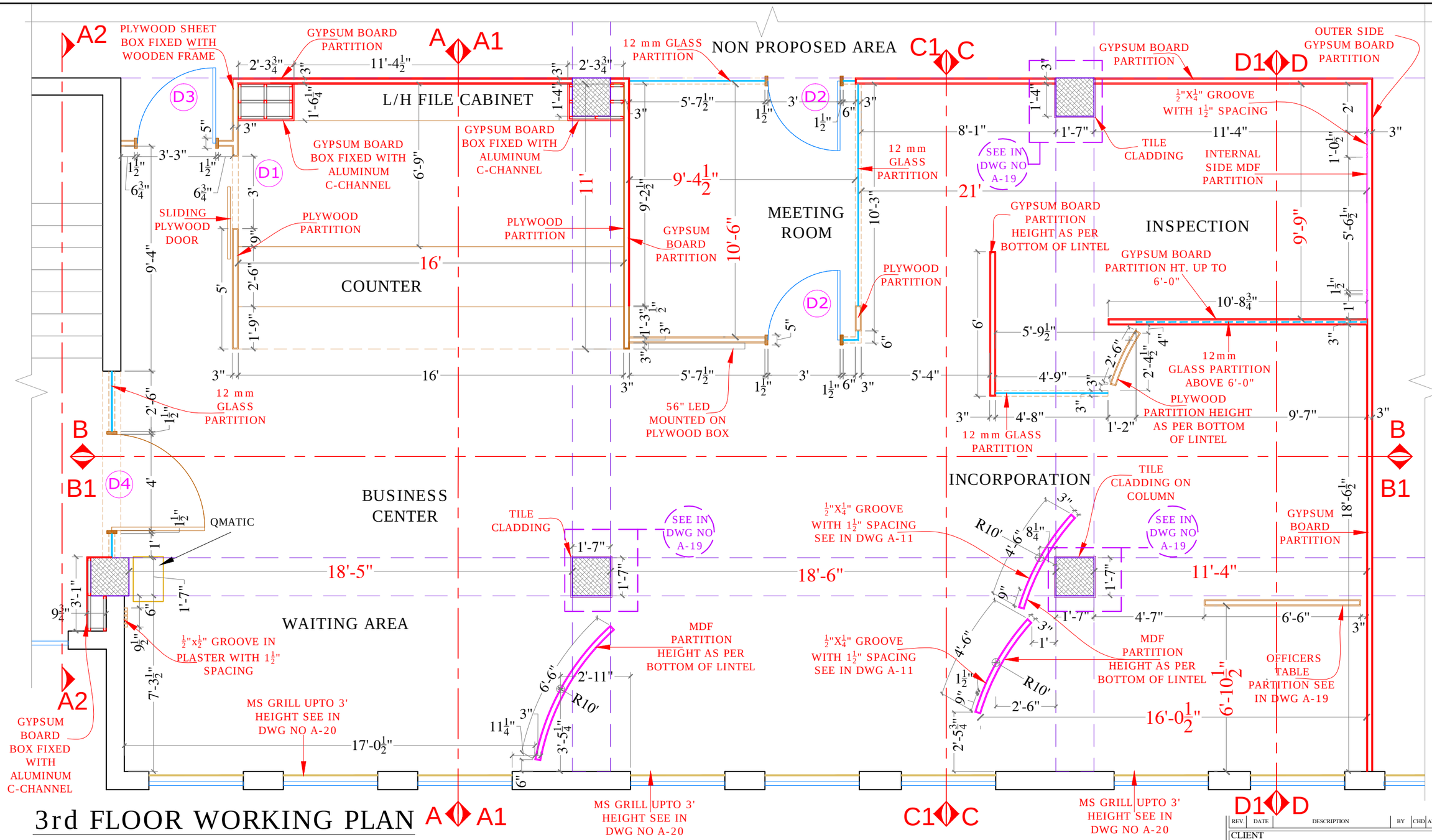

3rd FLOOR WORKING PLAN

NOTE:

DIMENSIONS MAY VARY AS PER SITE
CONTRACTOR NEEDS TO CO ORDINATES
IN CASE OF ANY DISCREPANCY

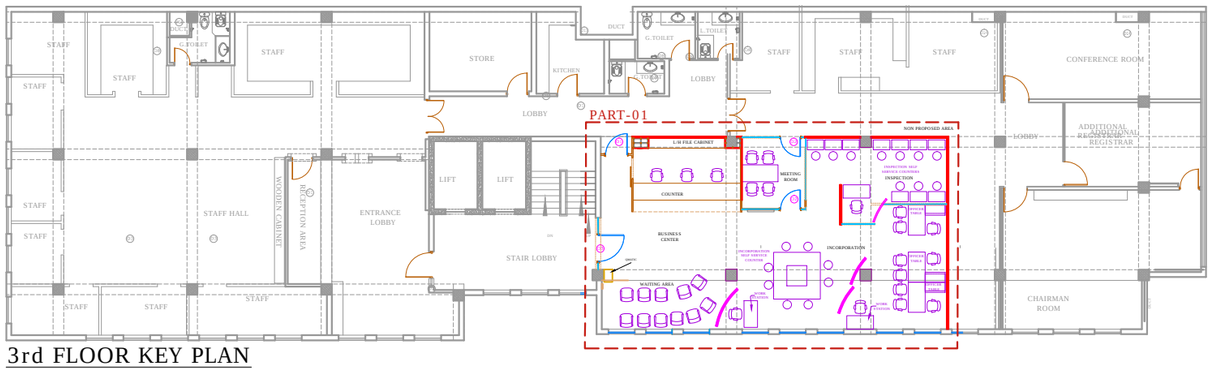

3rd FLOOR KEY PLAN

REV.	DATE	DESCRIPTION	BY	CHD	APP

CLIENT
SECURITIES AND EXCHANGE COMMISSION OF PAKISTAN

PROJECT
INTERIOR RENOVATION BUSINESS CENTER SECP CRO 3RD FLOOR LAHORE

DESIGN PHASE
TENDER DRAWINGS

TITLE
WORKING PLAN

DESIGN	DRAWN	SCALE
SHAZIA QURESHI	WASIM BUTT	AS SHOWN
CHECKED	APPROVED	DATE
SHAZIA QURESHI	SHAZIA QURESHI	24 Dec, 2020
NORTH	JOB No. A- 2125	
	DRG. No. A-04	

CONSULTANT:
SOHAIL A. KHAN ASSOCIATES
Architecture and Designing
House #159, Street 4, Race Course Road, Rawalpindi
Tel: 5174329 - 5174098; Fax: 5125075
Email: mail@saka.net.pk

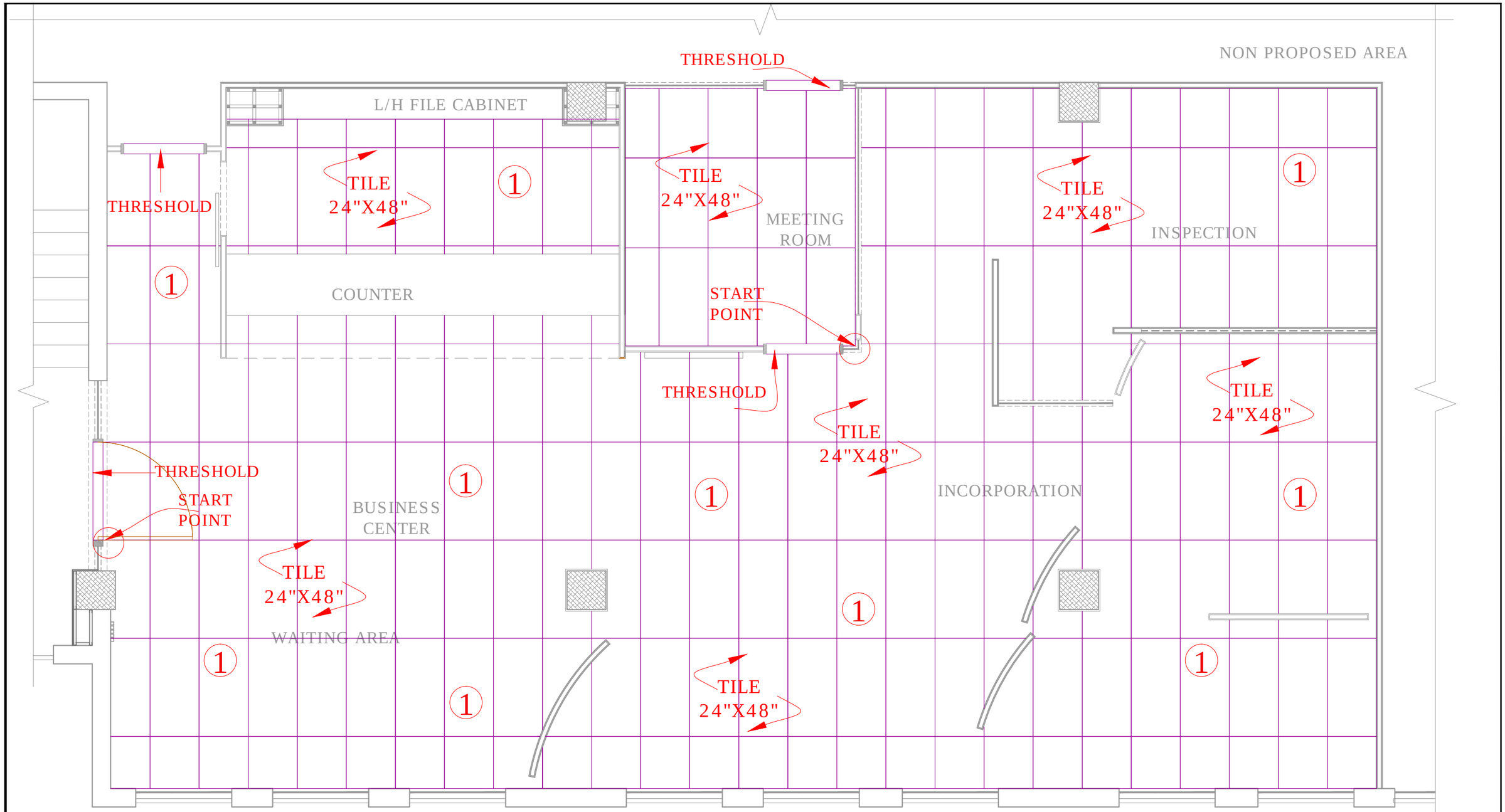

3rd FLOOR PATTERN PLAN

NOTE:

DIMENSIONS MAY VARY AS PER SITE
CONTRACTOR NEEDS TO CO ORDINATES
IN CASE OF ANY DISCREPANCY

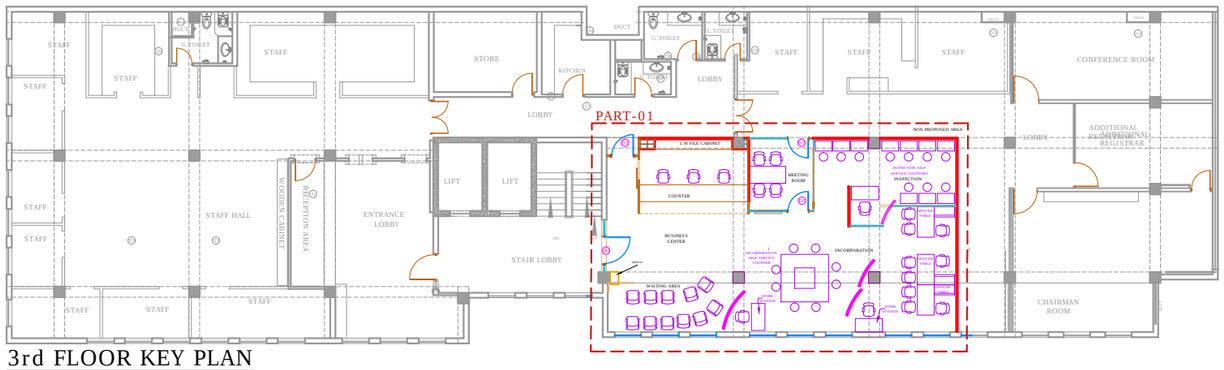

3rd FLOOR KEY PLAN

REV.	DATE	DESCRIPTION	BY	CHD	APP

CLIENT
SECURITIES AND EXCHANGE COMMISSION OF PAKISTAN

PROJECT
INTERIOR RENOVATION BUSINESS CENTER SECP CRO 3RD FLOOR LAHORE

DESIGN PHASE
TENDER DRAWINGS

TITLE
FLOORING PLAN

DESIGN	DRAWN	SCALE
SHAZIA QURESHI	WASIM BUTT	AS SHOWN
CHECKED	APPROVED	DATE
SHAZIA QURESHI	SHAZIA QURESHI	24 Dec, 2020
NORTH	JOB No. A- 2125	
	DRG. No. A-05	

CONSULTANT:
SOHAIL A. KHAN ASSOCIATES
Architecture and Designing
House #159, Street 4, Race Course Road, Rawalpindi
Tel: 5174329 - 5174098; Fax: 5125075
Email: mail@saka.net.pk

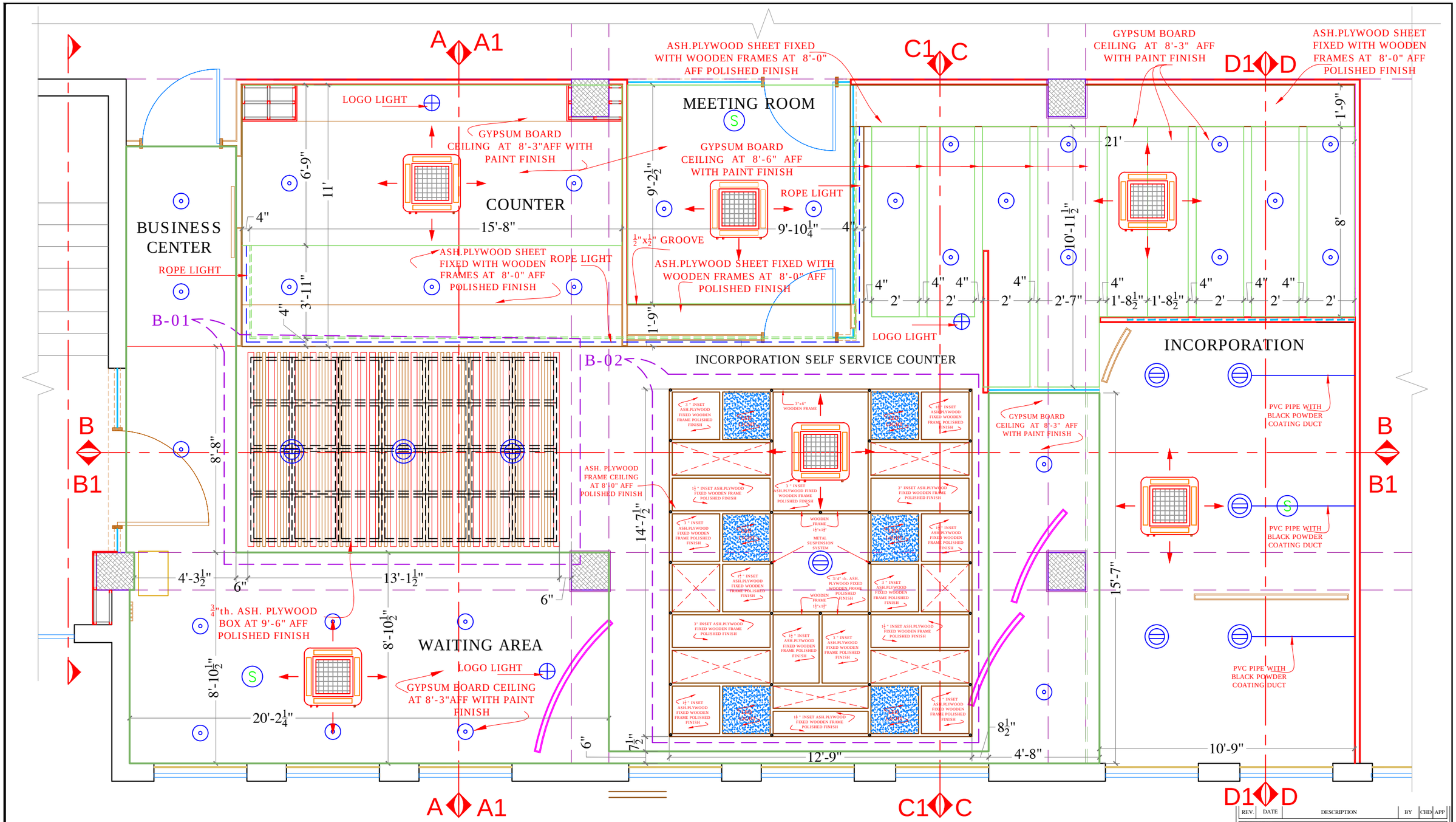

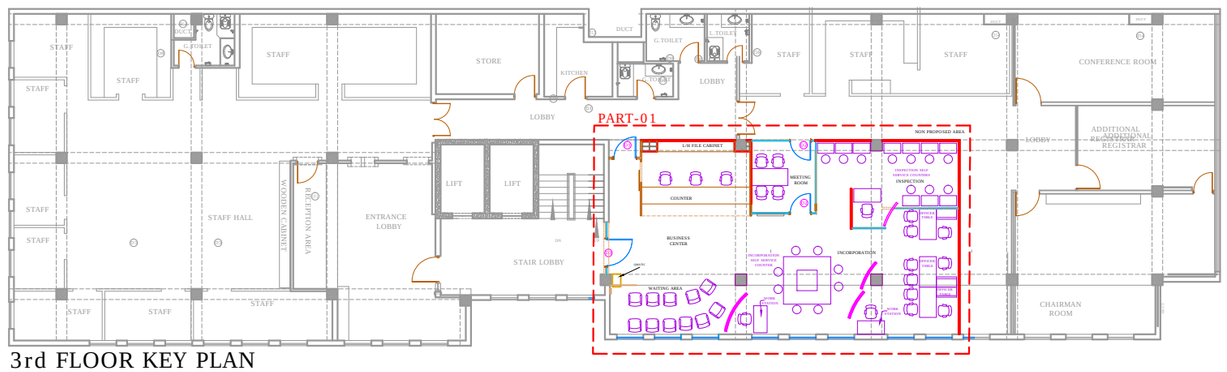

3rd FLOOR KEY PLAN

REV.	DATE	DESCRIPTION	BY	CHD	APP

CLIENT
SECURITIES AND EXCHANGE COMMISSION OF PAKISTAN

PROJECT
INTERIOR RENOVATION BUSINESS CENTER SECP CR0 3RD FLOOR LAHORE

DESIGN PHASE
TENDER DRAWINGS

TITLE
FALSE CEILING PLAN

DESIGN	DRAWN	SCALE
SHAZIA QURESHI	WASIM BUTT	AS SHOWN
CHECKED	APPROVED	DATE
SHAZIA QURESHI	SHAZIA QURESHI	24 Dec, 2020
NORTH	JOB No.	A- 2125
	DRG. No.	A-06

CONSULTANT:
SOHAIL A. KHAN ASSOCIATES
Architecture and Designing
House #159, Street 4, Race Course Road, Rawalpindi
Tel: 5174329 - 5174098; Fax: 5125075
Email: mail@saka.net.pk

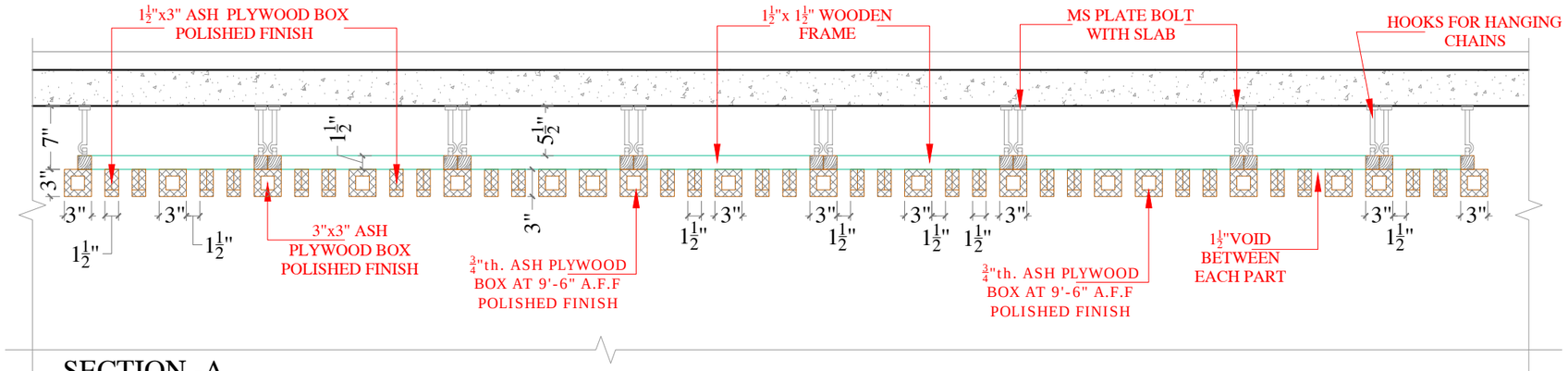

SECTION -A

SCALE, ¾" = 1'-0"

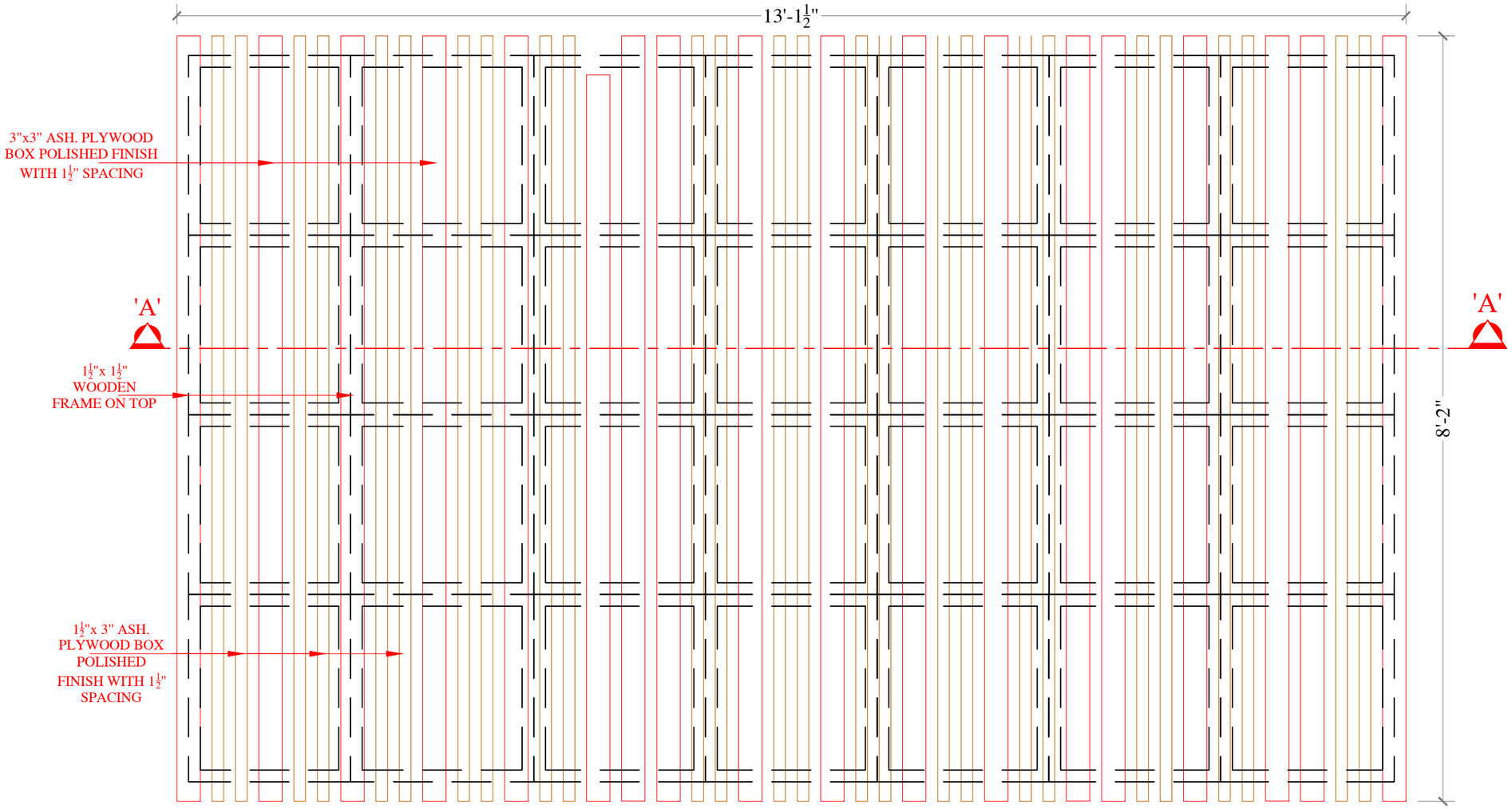

FALSE CEILING BLOWUP-01

SCALE, ¾" = 1'-0"

REV.	DATE	DESCRIPTION	BY	CHD	APP

CLIENT
SECURITIES AND EXCHANGE COMMISSION OF PAKISTAN

PROJECT
INTERIOR RENOVATION BUSINESS CENTER SECP CR0 3RD FLOOR LAHORE

DESIGN PHASE
TENDER DRAWINGS

TITLE
FALSE CEILING BLOW UP-01

DESIGN	DRAWN	SCALE
SHAZIA QURESHI	WASIM BUTT	AS SHOWN
CHECKED	APPROVED	DATE
SHAZIA QURESHI	SHAZIA QURESHI	24 Dec, 2020
NORTH	JOB No. A- 2125	
	DRG. No. A-07	

CONSULTANT:
SOHAIL A. KHAN ASSOCIATES
Architecture and Designing
House #159, Street 4, Race Course Road, Rawalpindi
Tel: 5174329 - 5174098; Fax: 5125075
Email: mail@saka.net.pk

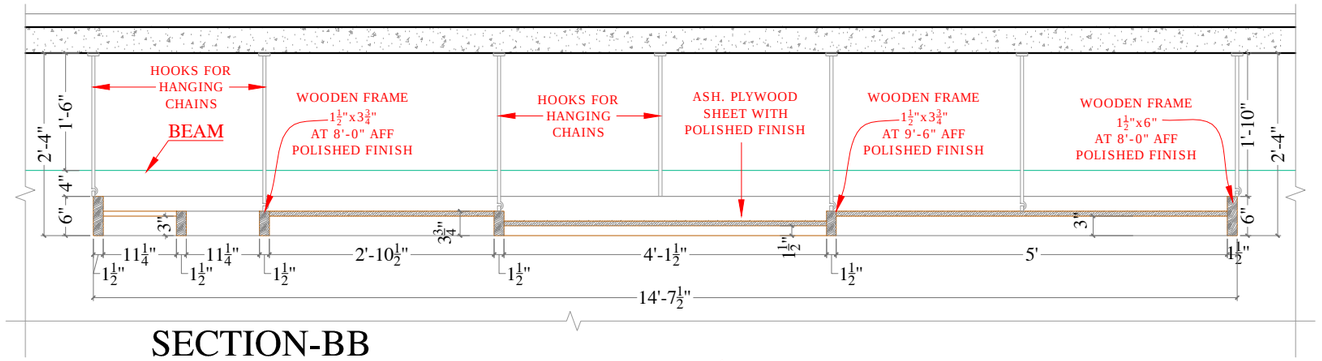

SECTION-BB

SCALE, ½"-1'-0"

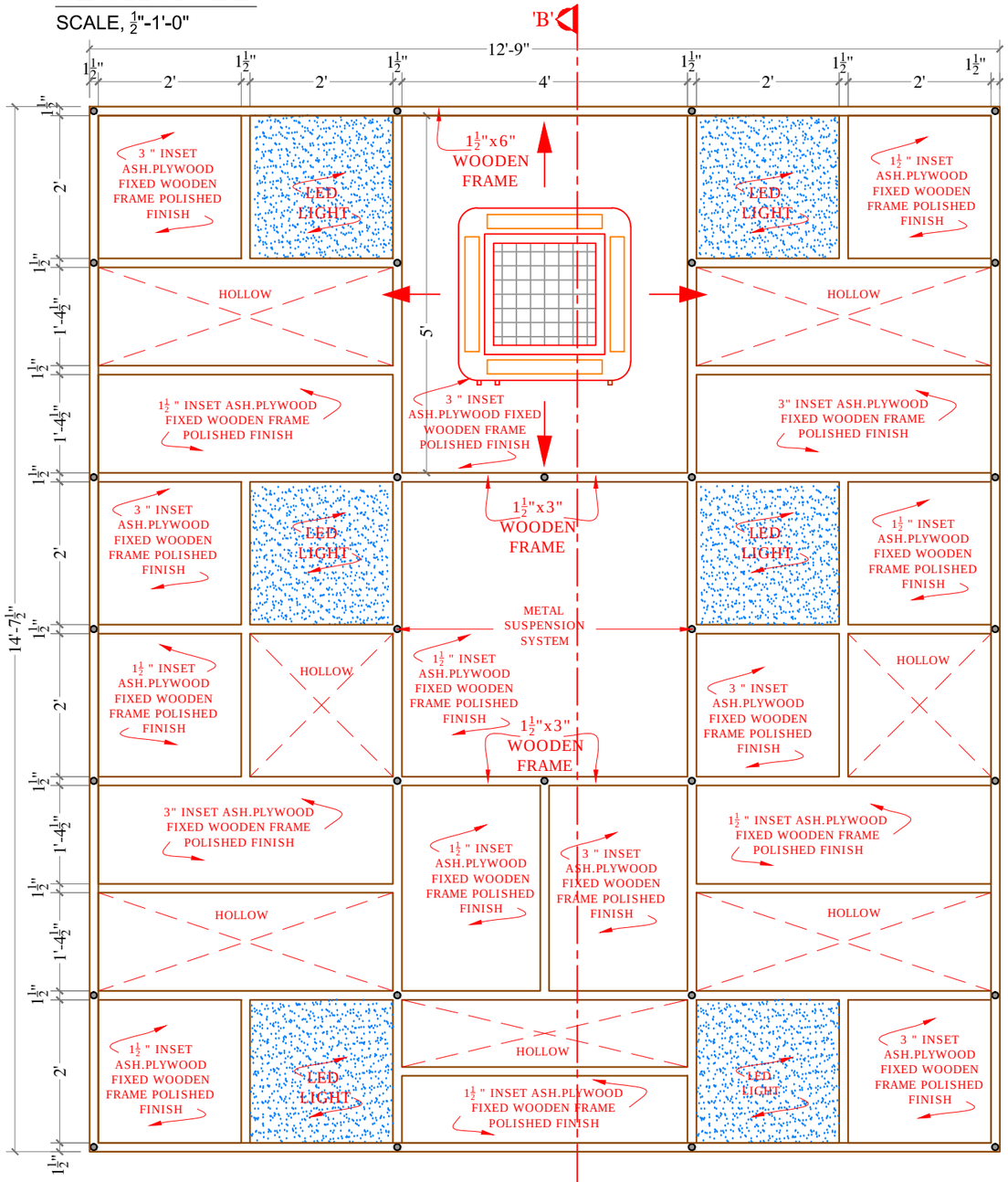

FALSE CEILING BLOWUP - 02

SCALE, ½"-1'-0"

REV.	DATE	DESCRIPTION	BY	CHD	APP

CLIENT
SECURITIES AND EXCHANGE COMMISSION OF PAKISTAN

PROJECT
INTERIOR RENOVATION BUSINESS CENTER SECP CR0 3RD FLOOR LAHORE

DESIGN PHASE
TENDER DRAWINGS

TITLE
FALSE CEILING BLOW UP-02

DESIGN	DRAWN	SCALE
SHAZIA QURESHI	WASIM BUTT	AS SHOWN
CHECKED	APPROVED	DATE
SHAZIA QURESHI	SHAZIA QURESHI	24 Dec, 2020
NORTH	JOB No. A- 2125	
	DRG. No. A-08	

CONSULTANT:
SOHAIL A. KHAN ASSOCIATES
Architecture and Designing
House #159, Street 4, Race Course Road, Rawalpindi
Tel: 5174329 - 5174098; Fax: 5125075
Email: mail@saka.net.pk

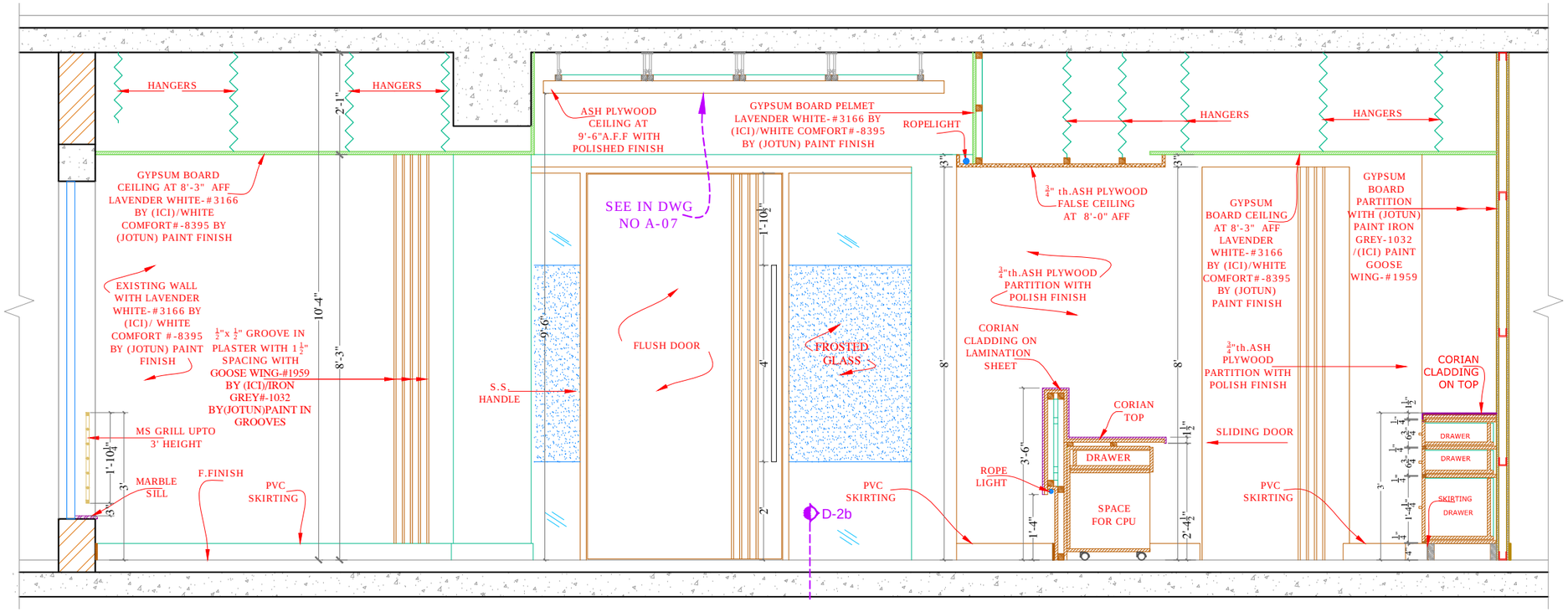

SECTION AT 'A'

SCALE $\frac{3}{8}$"=1'-0"

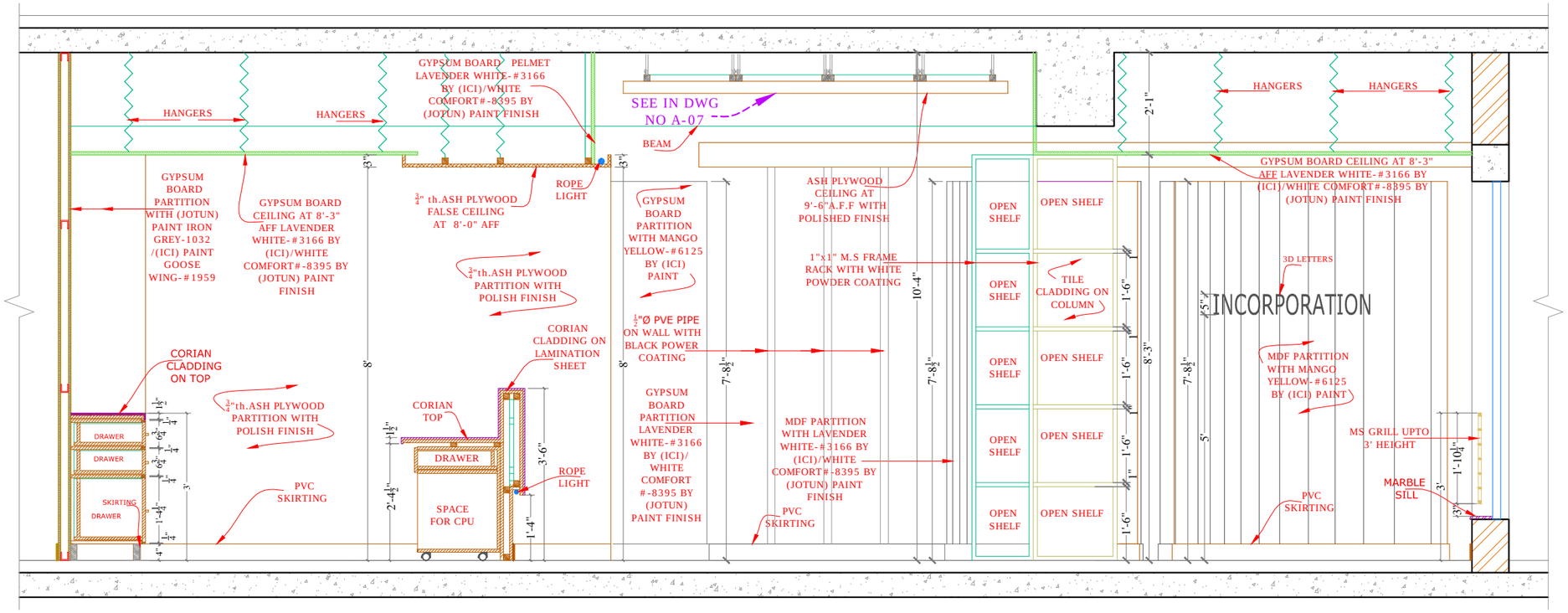

SECTION AT 'A1'

SCALE $\frac{3}{8}$"=1'-0"

REV.	DATE	DESCRIPTION	BY	CHD	APP

CLIENT
SECURITIES AND EXCHANGE COMMISSION OF PAKISTAN

PROJECT
INTERIOR RENOVATION BUSINESS CENTER SECP CR0 3RD FLOOR LAHORE

DESIGN PHASE
TENDER DRAWINGS

TITLE
SECTION AT 'A-A' & A-1

DESIGN	DRAWN	SCALE
SHAZIA QURESHI	WASIM BUTT	AS SHOWN
CHECKED	APPROVED	DATE
SHAZIA QURESHI	SHAZIA QURESHI	24 Dec, 2020
NORTH	JOB No. A- 2125	
	DRG. No. A-09	

CONSULTANT:
SOHAIL A. KHAN ASSOCIATES
Architecture and Designing
House #159, Street 4, Race Course Road, Rawalpindi
Tel: 5174329 - 5174098; Fax: 5125075
Email: mail@saka.net.pk

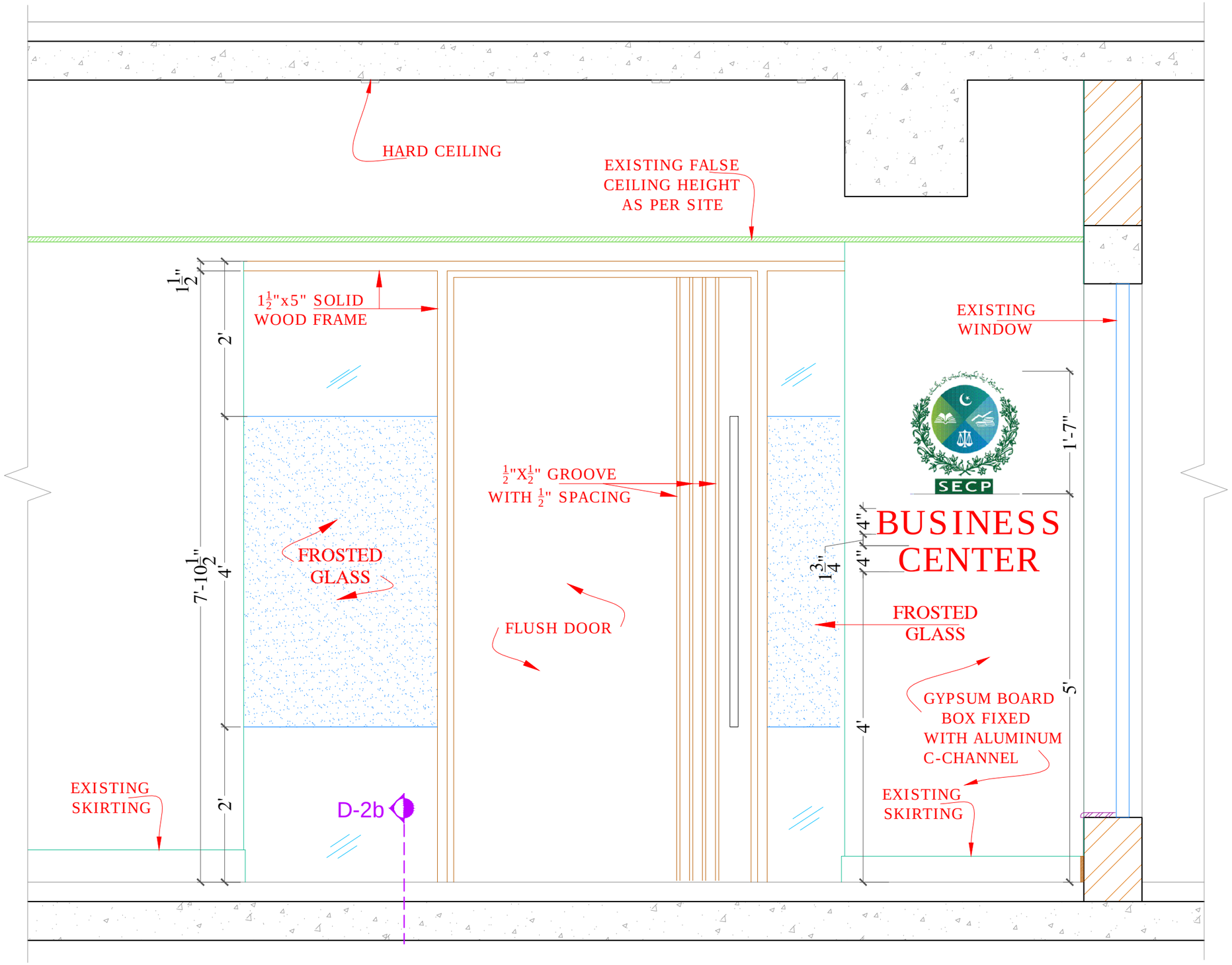

SECTION AT 'A2'

SCALE, ⅜"=1'-0"

REV.	DATE	DESCRIPTION	BY	CHD	APP

CLIENT
SECURITIES AND EXCHANGE COMMISSION OF PAKISTAN

PROJECT
INTERIOR RENOVATION BUSINESS CENTER SECP CR0 3RD FLOOR LAHORE

DESIGN PHASE
TENDER DRAWINGS

TITLE
SECTION AT 'A-A' & A-1

DESIGN	DRAWN	SCALE
SHAZIA QURESHI	WASIM BUTT	AS SHOWN
CHECKED	APPROVED	DATE
SHAZIA QURESHI	SHAZIA QURESHI	24 Dec, 2020
NORTH	JOB No. A- 2125	
	DRG. No. A-09a	

CONSULTANT:
SOHAIL A. KHAN ASSOCIATES
Architecture and Designing
House #159, Street 4, Race Course Road, Rawalpindi
Tel: 5174329 - 5174098; Fax: 5125075
Email: mail@saka.net.pk

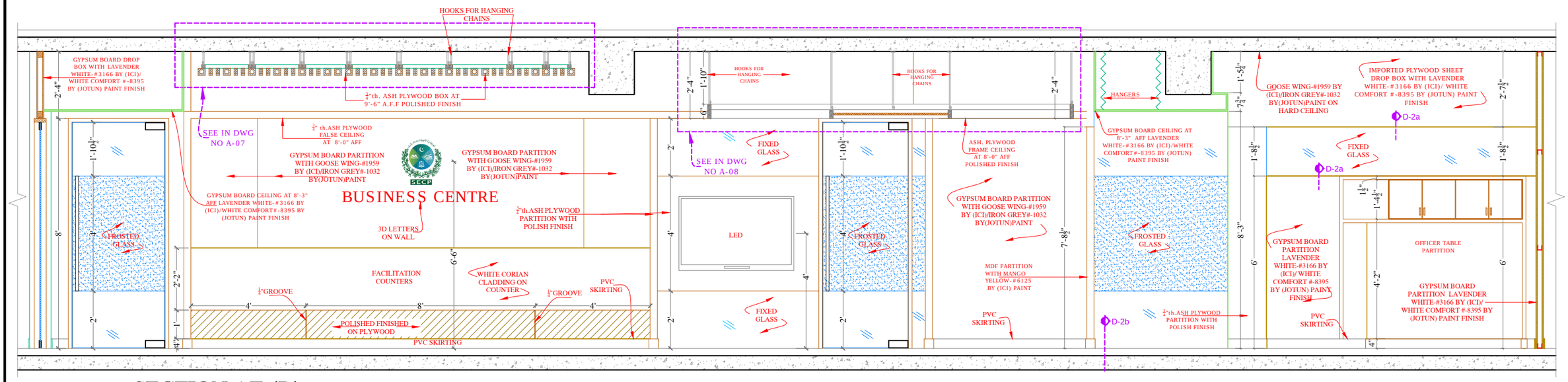

SECTION AT 'B'

SCALE $\frac{1}{4}$"=1'-0"

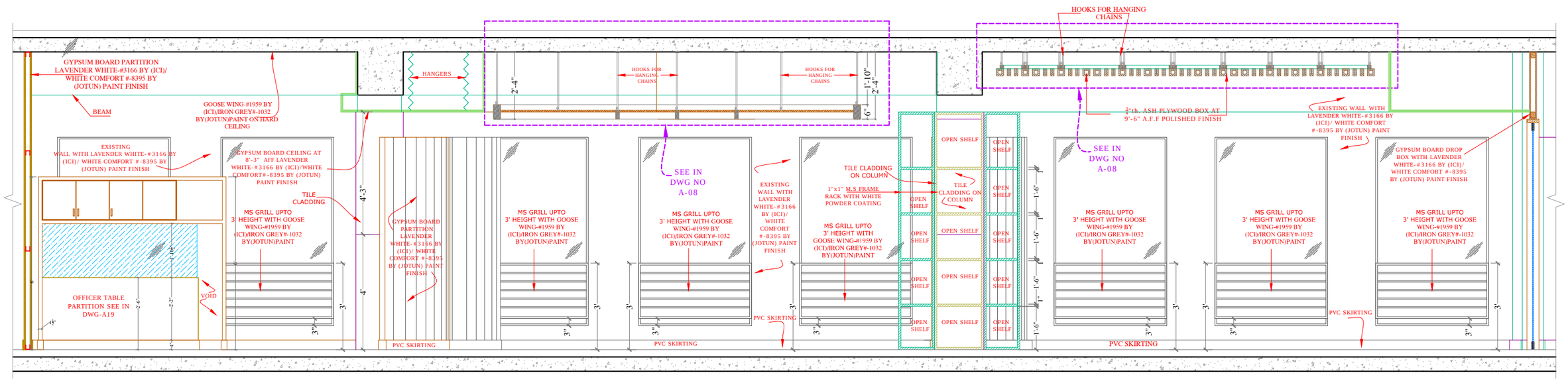

SECTION AT 'B-1'

SCALE $\frac{1}{8}$"=1'-0"

REV.	DATE	DESCRIPTION	BY	CHD	APP

CLIENT
SECURITIES AND EXCHANGE COMMISSION OF PAKISTAN

PROJECT
INTERIOR RENOVATION BUSINESS CENTER SECP CR0 3RD FLOOR LAHORE

DESIGN PHASE
TENDER DRAWINGS

TITLE
SECTION 'B' & PARTS

DESIGN	DRAWN	SCALE
SHAZIA QURESHI	WASIM BUTT	AS SHOWN
CHECKED	APPROVED	DATE
SHAZIA QURESHI	SHAZIA QURESHI	24 Dec, 2020
NORTH	JOB No. A- 2125	
	DRG. No. A-10	

CONSULTANT:
SOHAIL A. KHAN ASSOCIATES
Architecture and Designing
House #159, Street 4, Race Course Road, Rawalpindi
Tel: 5174329 - 5174098; Fax: 5125075
Email: mail@saka.net.pk

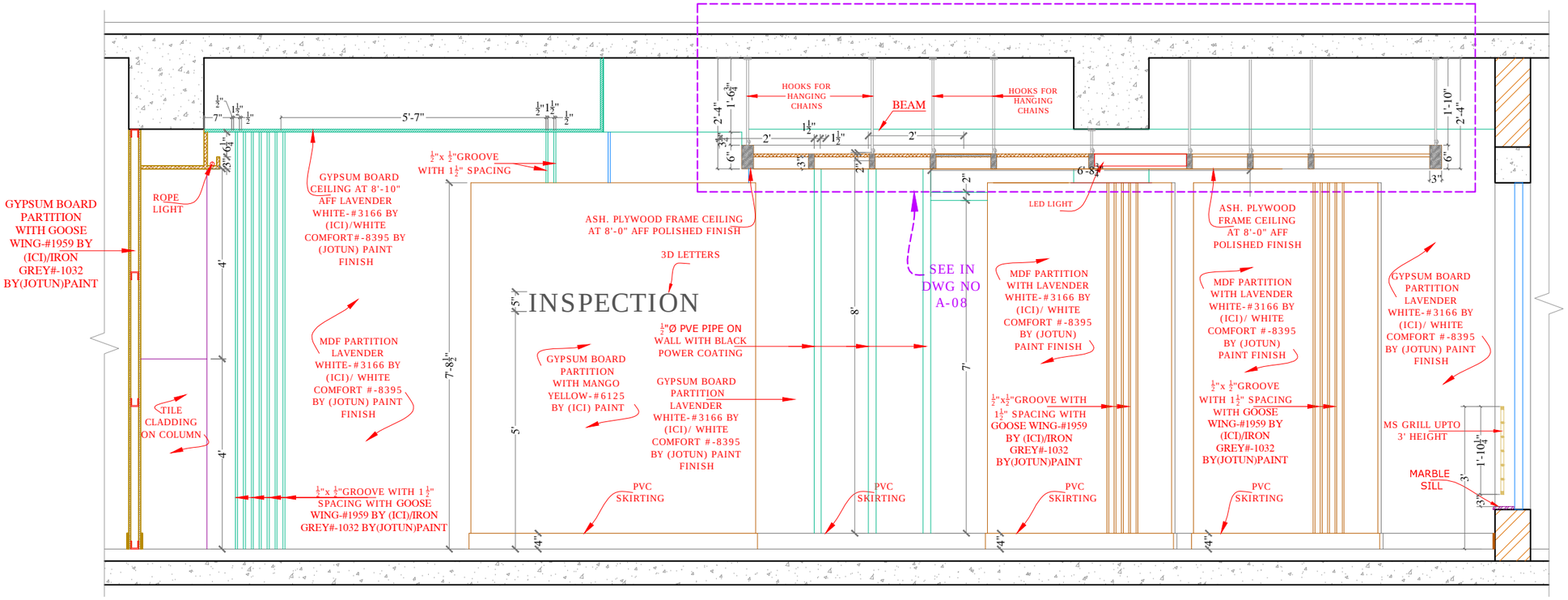

SECTION AT 'C-C'

SCALE $\frac{1}{8}$"=1'-0"

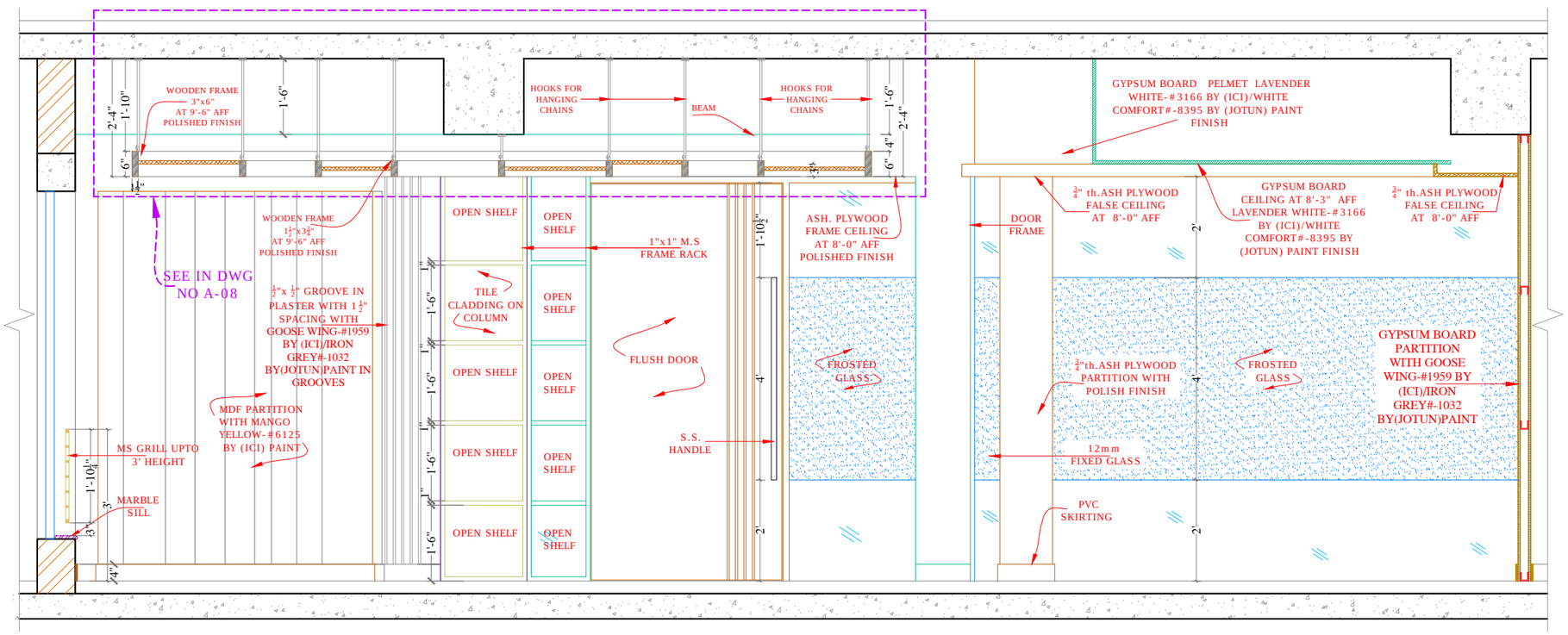

SECTION AT 'C-1'

SCALE $\frac{1}{8}$"=1'-0"

REV.	DATE	DESCRIPTION	BY	CHD	APP

CLIENT
SECURITIES AND EXCHANGE COMMISSION OF PAKISTAN

PROJECT
INTERIOR RENOVATION BUSINESS CENTER SECP CR0 3RD FLOOR LAHORE

DESIGN PHASE
TENDER DRAWINGS

TITLE
SECTION 'B' & PARTS

DESIGN	DRAWN	SCALE
SHAZIA QURESHI	WASIM BUTT	AS SHOWN
CHECKED	APPROVED	DATE
SHAZIA QURESHI	SHAZIA QURESHI	24 Dec, 2020
NORTH	JOB No. A- 2125	
	DRG. No. A-11	

CONSULTANT:
SOHAIL A. KHAN ASSOCIATES
Architecture and Designing
House #159, Street 4, Race Course Road, Rawalpindi
Tel: 5174329 - 5174098; Fax: 5125075
Email: mail@saka.net.pk

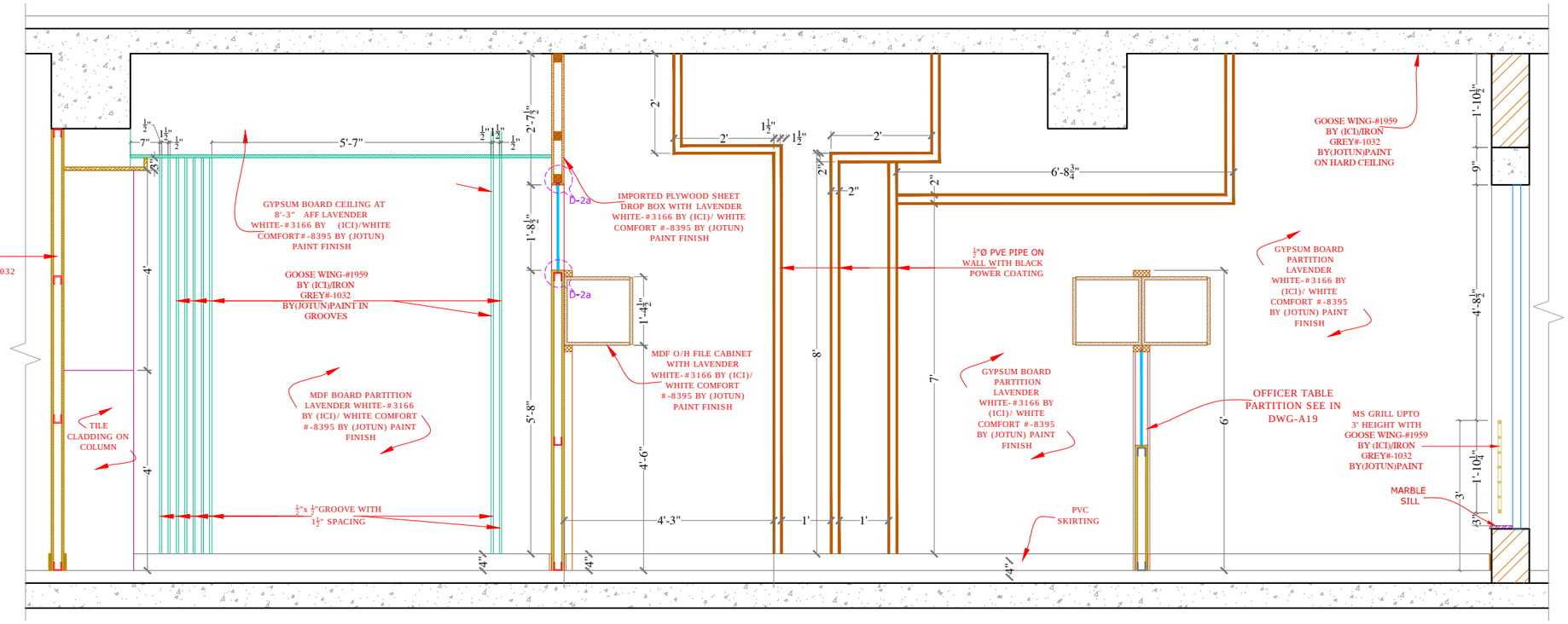

SECTION AT 'D-D'

SCALE $\frac{1}{8}$"=1'-0"

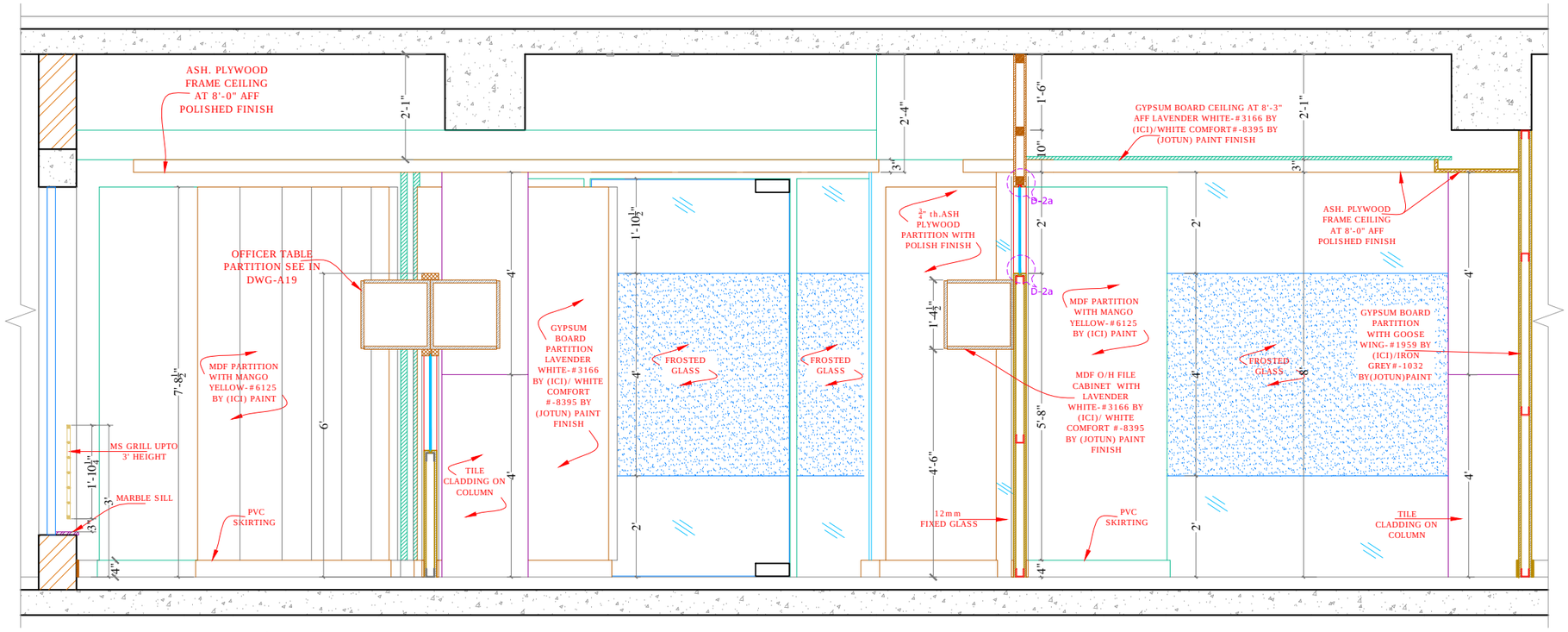

SECTION AT 'D-1'

SCALE $\frac{1}{8}$"=1'-0"

REV.	DATE	DESCRIPTION	BY	CHD	APP

CLIENT
SECURITIES AND EXCHANGE COMMISSION OF PAKISTAN

PROJECT
INTERIOR RENOVATION BUSINESS CENTER SECP CR0 3RD FLOOR LAHORE

DESIGN PHASE
TENDER DRAWINGS

TITLE
SECTION 'DD' & D1 PARTS

DESIGN	DRAWN	SCALE
SHAZIA QURESHI	WASIM BUTT	AS SHOWN
CHECKED	APPROVED	DATE
SHAZIA QURESHI	SHAZIA QURESHI	24 Dec, 2020
NORTH	JOB No. A- 2125	
	DRG. No. A-12	

CONSULTANT:
SOHAIL A. KHAN ASSOCIATES
Architecture and Designing
House #159, Street 4, Race Course Road, Rawalpindi
Tel: 5174329 - 5174098; Fax: 5125075
Email: mail@saka.net.pk

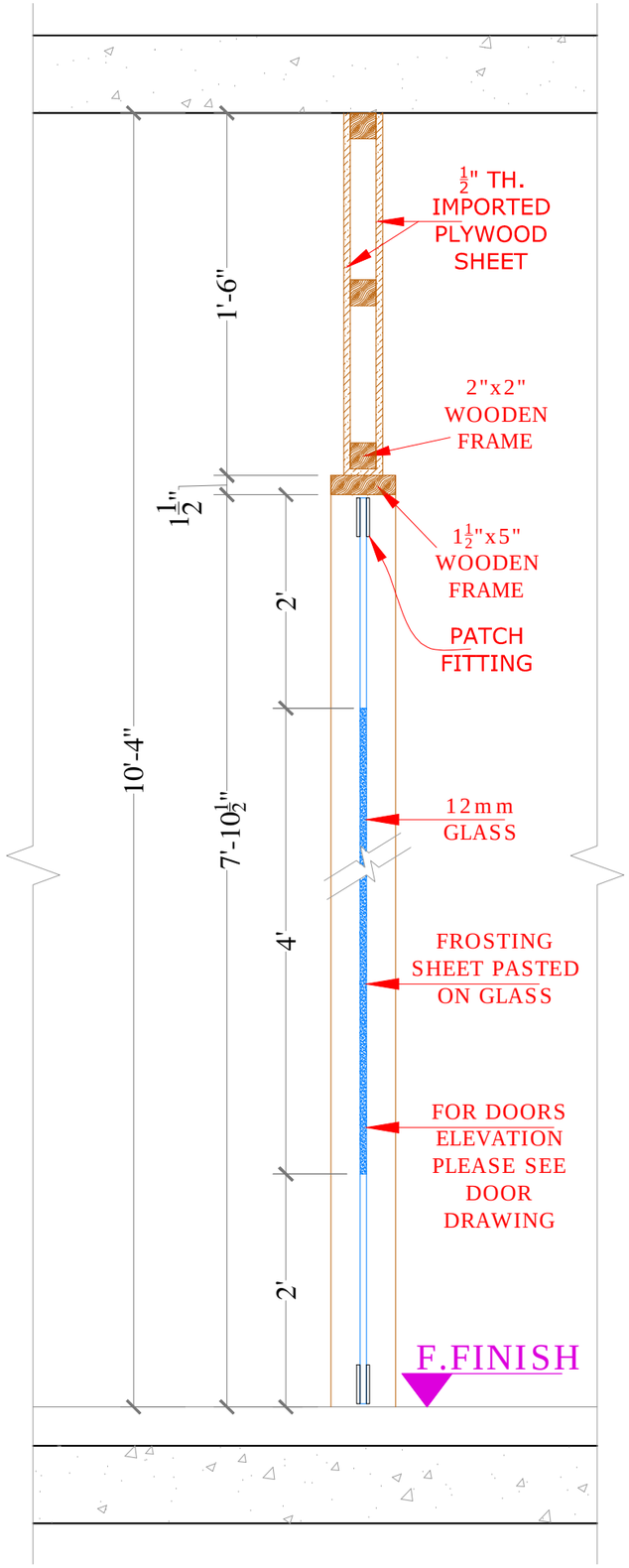

DETAIL -01

SCALE,1"=1'-0"

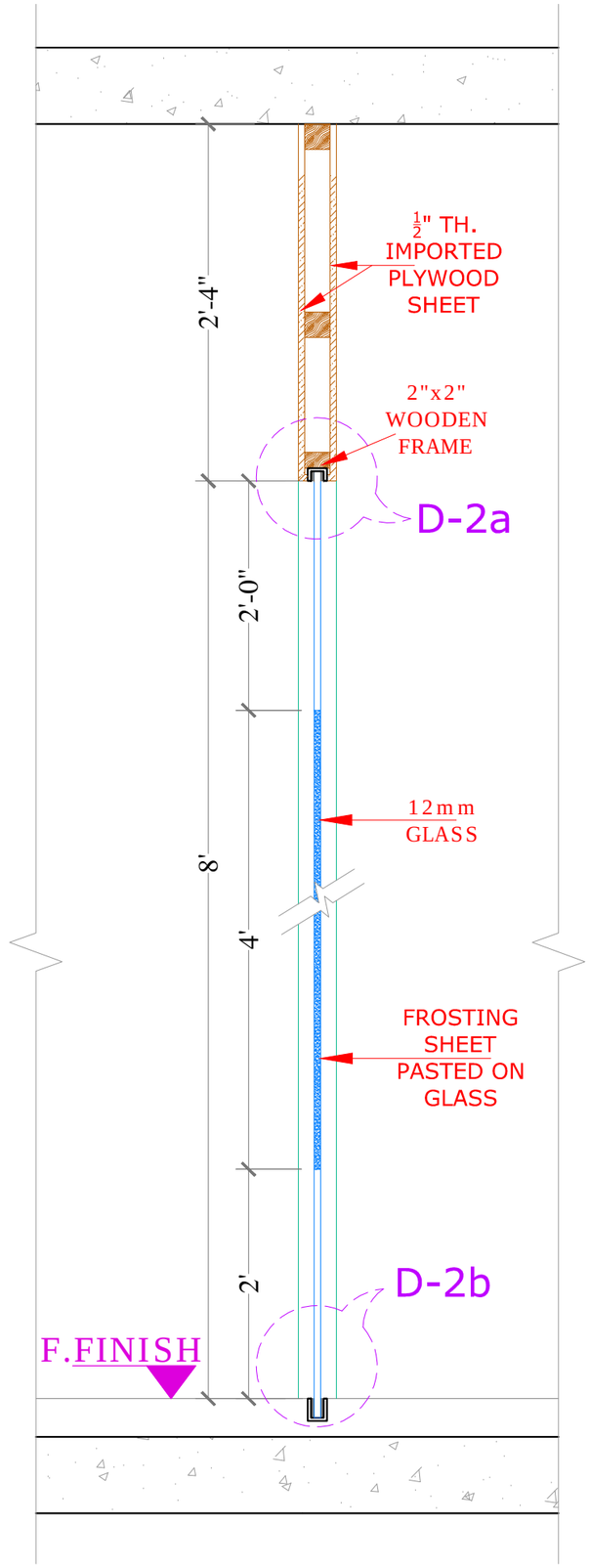

DETAIL -02

SCALE,1"=1'-0"

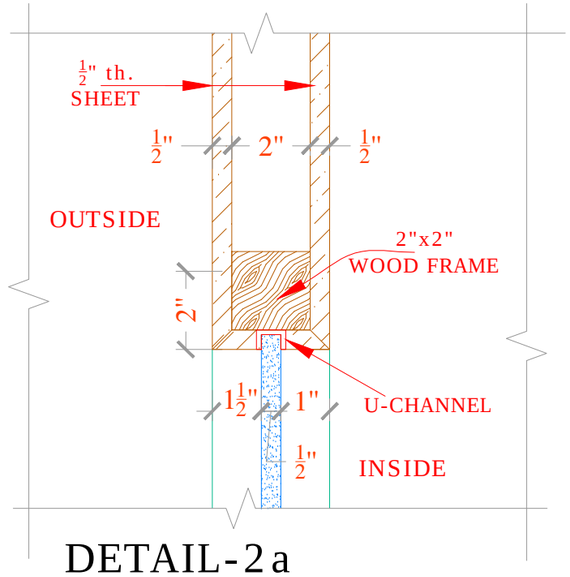

DETAIL-2a

SCALE, 3"=1'-0"

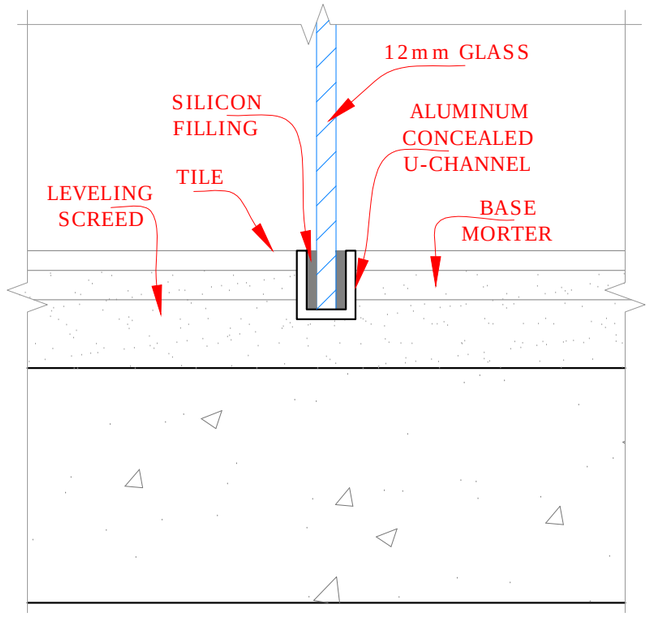

DETAIL-2b

SCALE, 3"=1'-0"

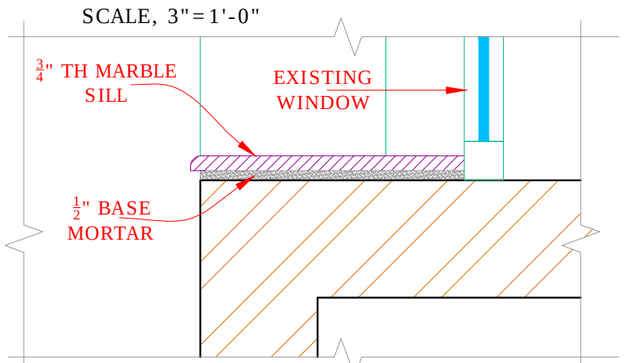

DETAIL-03

SCALE, 1-1/2"=1'-0"

REV.	DATE	DESCRIPTION	BY	CHD	APP

CLIENT
SECURITIES AND EXCHANGE COMMISSION OF PAKISTAN

PROJECT
INTERIOR RENOVATION BUSINESS CENTER SECP CR0 3RD FLOOR LAHORE

DESIGN PHASE
TENDER DRAWINGS

TITLE
SECTION DETAILS

DESIGN	DRAWN	SCALE
SHAZIA QURESHI	WASIM BUTT	AS SHOWN
CHECKED	APPROVED	DATE
SHAZIA QURESHI	SHAZIA QURESHI	24 Dec, 2020
NORTH	JOB No.	A- 2125
	DRG. No.	A-13

CONSULTANT:
SOHAIL A. KHAN ASSOCIATES
Architecture and Designing
House #159, Street 4, Race Course Road, Rawalpindi
Tel: 5174329 - 5174098; Fax: 5125075
Email: mail@saka.net.pk

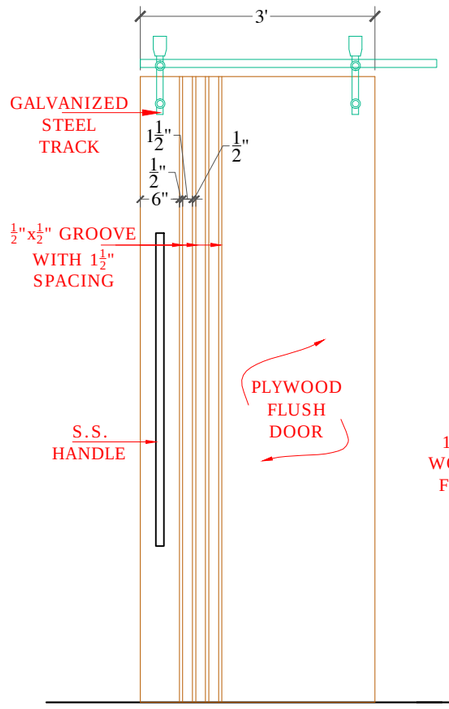

DOOR-01 / QTY. 1
(WOODEN FLUSH DOOR)
SCALE, 1/2"=1'-0"

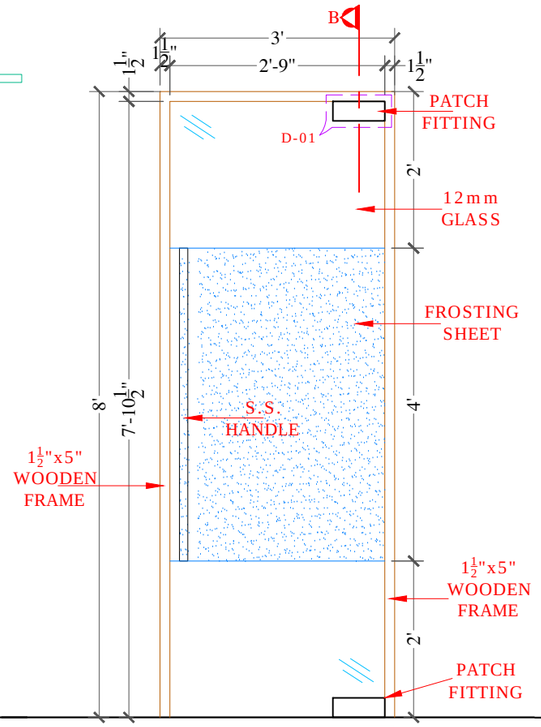

DOOR-02 / QTY. 2
(GLASS DOOR WITH WOODEN FRAME)
SCALE, 1/2"=1'-0"

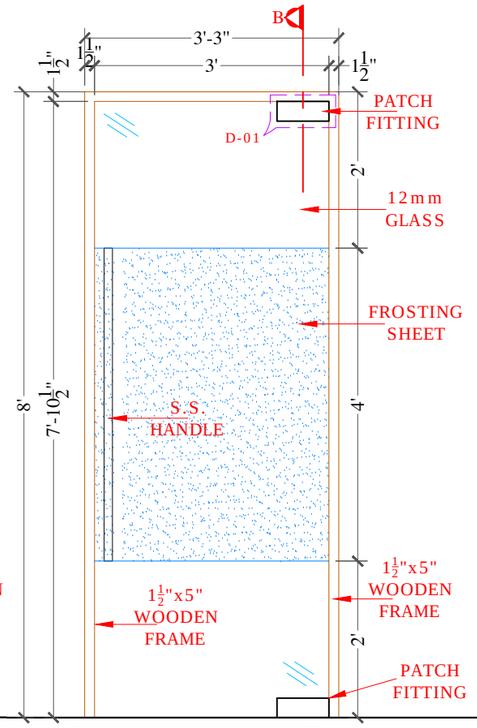

DOOR-03 / QTY. 1
(GLASS DOOR WITH WOODEN FRAME)
SCALE, 1/2"=1'-0"

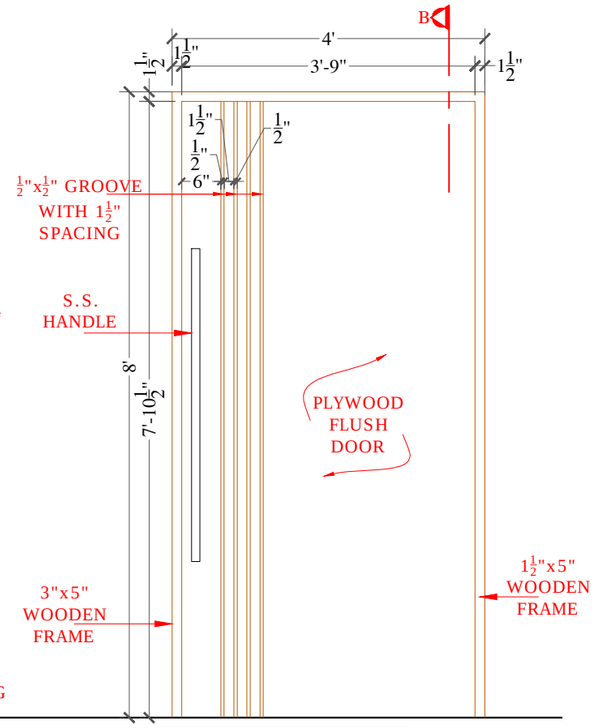

DOOR-04 / QTY. 1
(GLASS DOOR WITH WOODEN FRAME)
SCALE, 1/2"=1'-0"

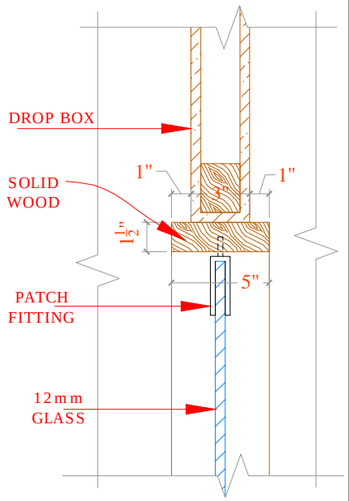

SECTION 'B'
SCALE, 1½"=1'-0"

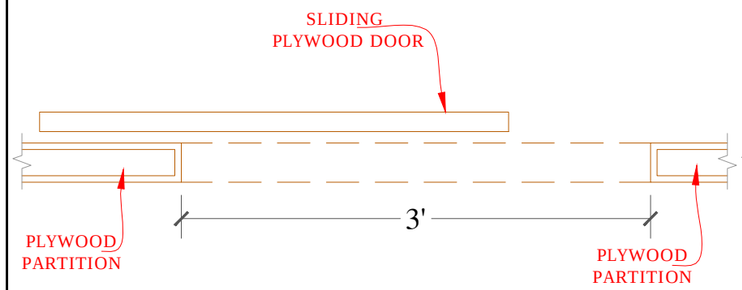

SLIDING DOOR-01
WITH WOODEN FRAME PLAN
SCALE, 1"=1'-0"

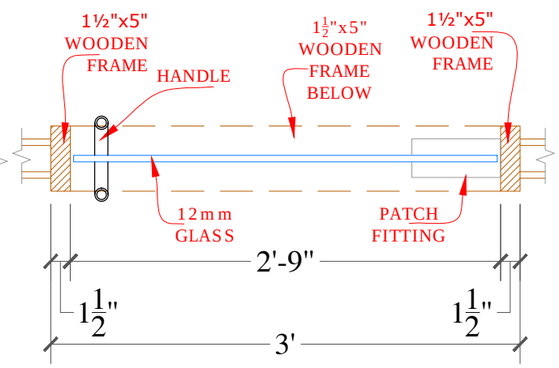

GLASS DOOR-01
WITH WOODEN FRAME PLAN
SCALE, 1"=1'-0"

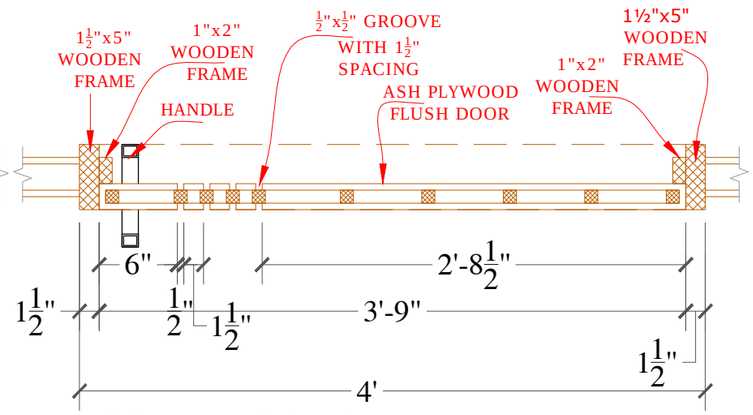

WOODEN DOOR-01
WITH WOODEN FRAME PLAN
SCALE, 1"=1'-0"

REV.	DATE	DESCRIPTION	BY	CHD	APP

CLIENT
SECURITIES AND EXCHANGE COMMISSION OF PAKISTAN

PROJECT
INTERIOR RENOVATION 3RD FLOOR BUSINESS CENTER LAHORE

DESIGN PHASE
TENDER DRAWINGS

TITLE
FILE CABINET DETAIL

DESIGN	DRAWN	SCALE
SHAZIA QURESHI	USMAN HAIDER	AS SHOWN
CHECKED	APPROVED	DATE
SHAZIA QURESHI	SHAZIA QURESHI	24 Dec, 2020
NORTH	JOB No.	A- 2125
	DRG. No.	A-14

CONSULTANT:
SOHAIL A. KHAN ASSOCIATES
Architecture and Designing
House #159, Street 4, Race Course Road, Rawalpindi
Tel: 5174329 - 5174098; Fax: 5125075
Email: mail@saka.net.pk

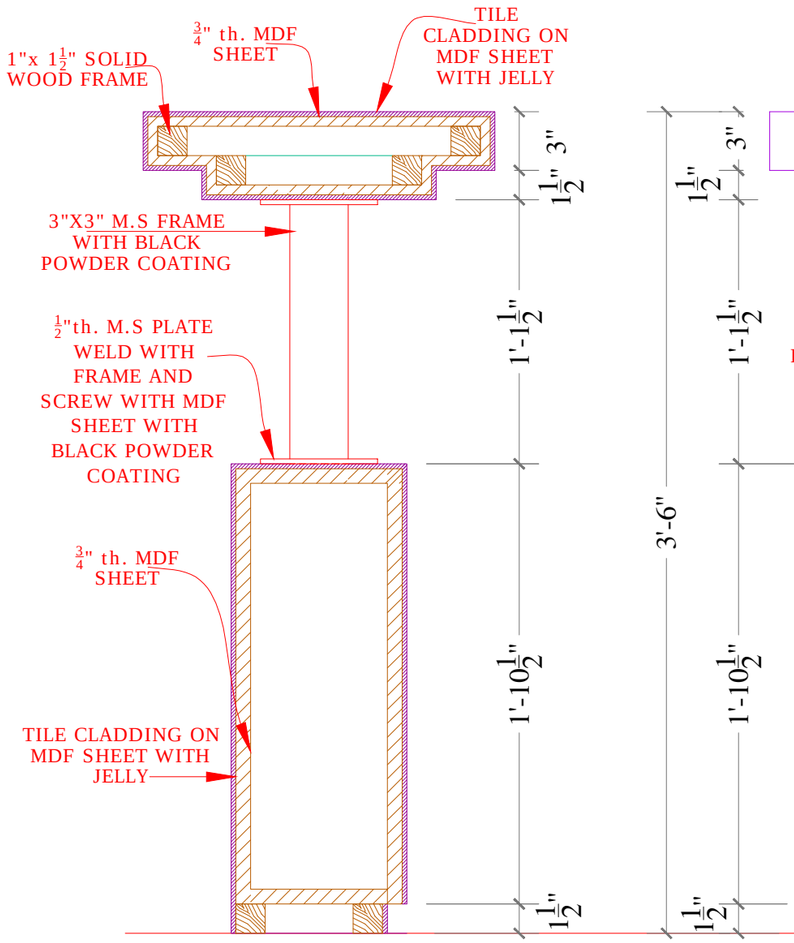

SECTION-A

SCALE , 1½" = 1'-0"

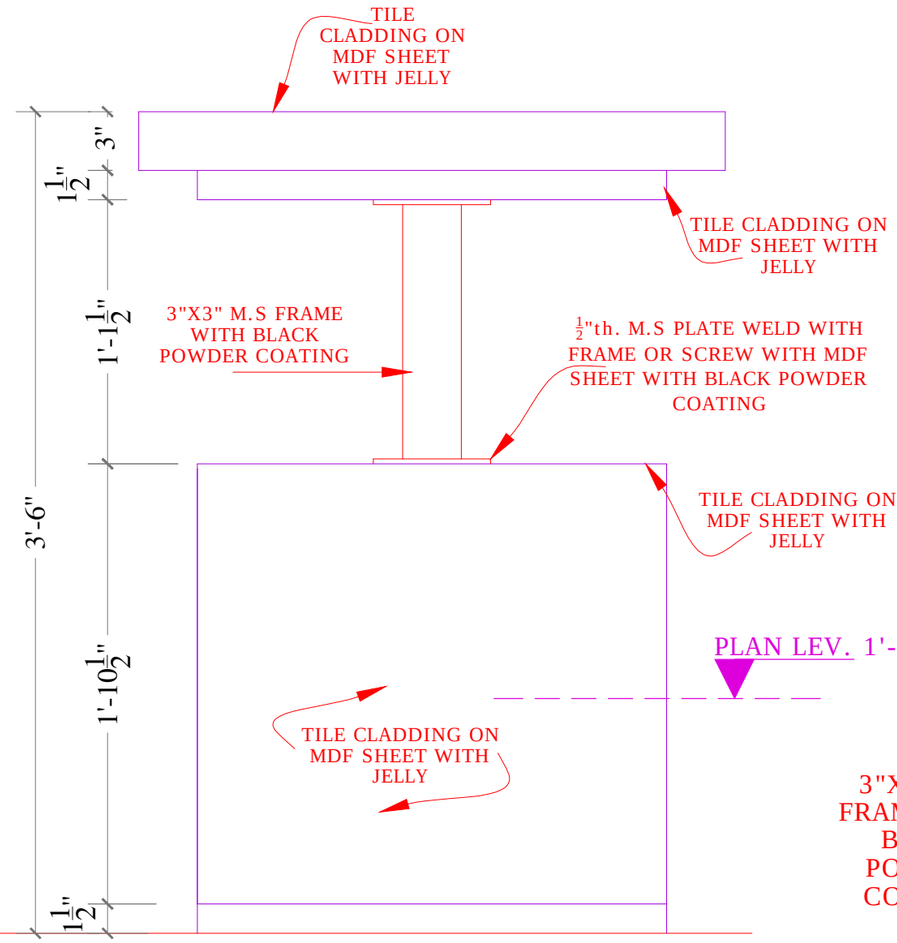

ELEVATION-01

SCALE , 1½" = 1'-0"

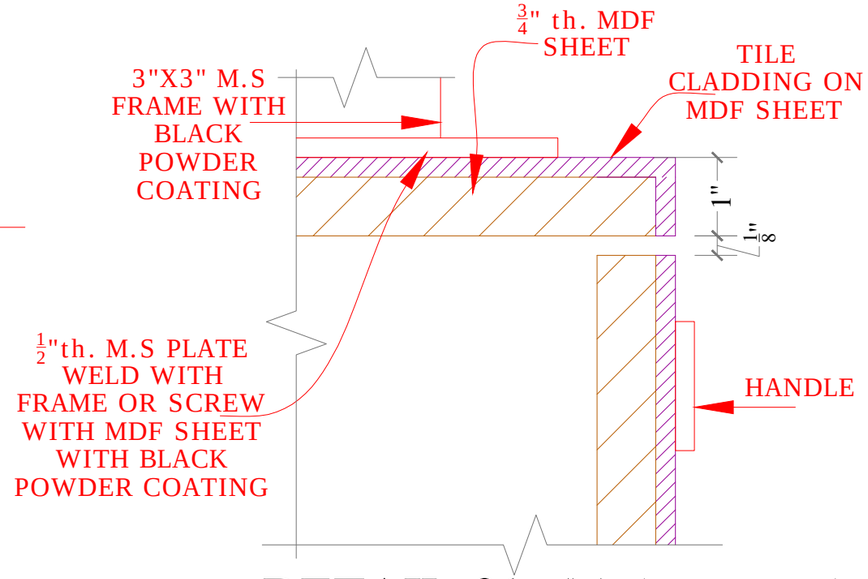

DETAIL-01

SCALE , 6" = 1'-0"

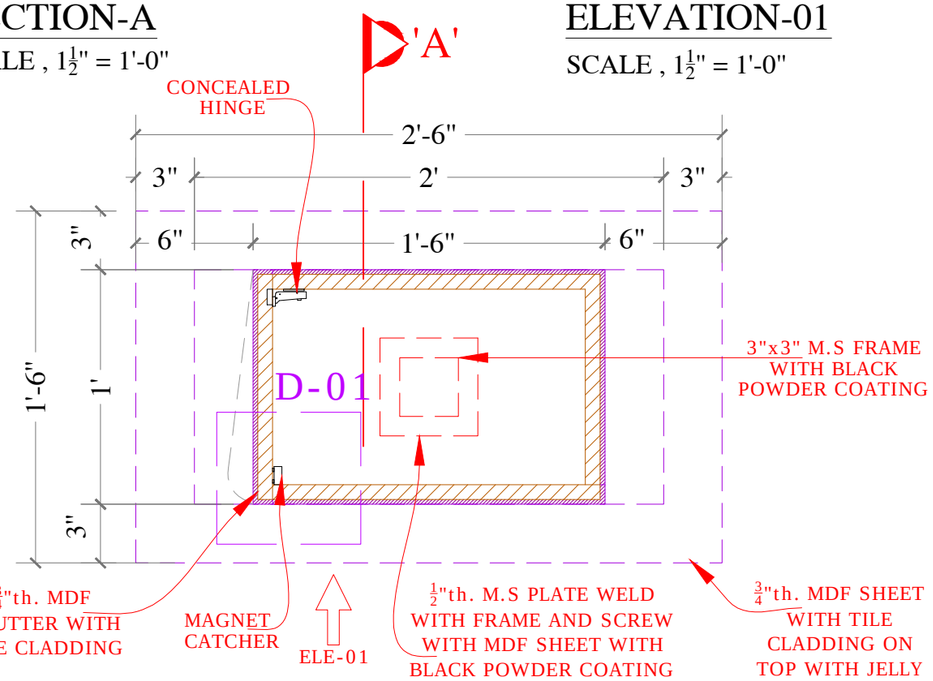

SELF SERVICE COUNTER DETAIL PLAN AT LEV 1'-0"

SCALE , 1½" = 1'-0"

REV.	DATE	DESCRIPTION	BY	CHD	APP

CLIENT
SECURITIES AND EXCHANGE COMMISSION OF PAKISTAN

PROJECT
INTERIOR RENOVATION BUSINESS CENTER SECP CRO 3RD FLOOR LAHORE

DESIGN PHASE
TENDER DRAWINGS

TITLE
SELF SERVICE COUNTER DETAIL

DESIGN	DRAWN	SCALE
SHAZIA QURESHI	WASIM BUTT	AS SHOWN
CHECKED	APPROVED	DATE
SHAZIA QURESHI	SHAZIA QURESHI	24 Dec, 2020
NORTH	JOB No. A- 2125	
	DRG. No. A-15	

CONSULTANT:
SOHAIL A. KHAN ASSOCIATES
Architecture and Designing
House #159, Street 4, Race Course Road, Rawalpindi
Tel: 5174329 - 5174098; Fax: 5125075
Email: mail@saka.net.pk

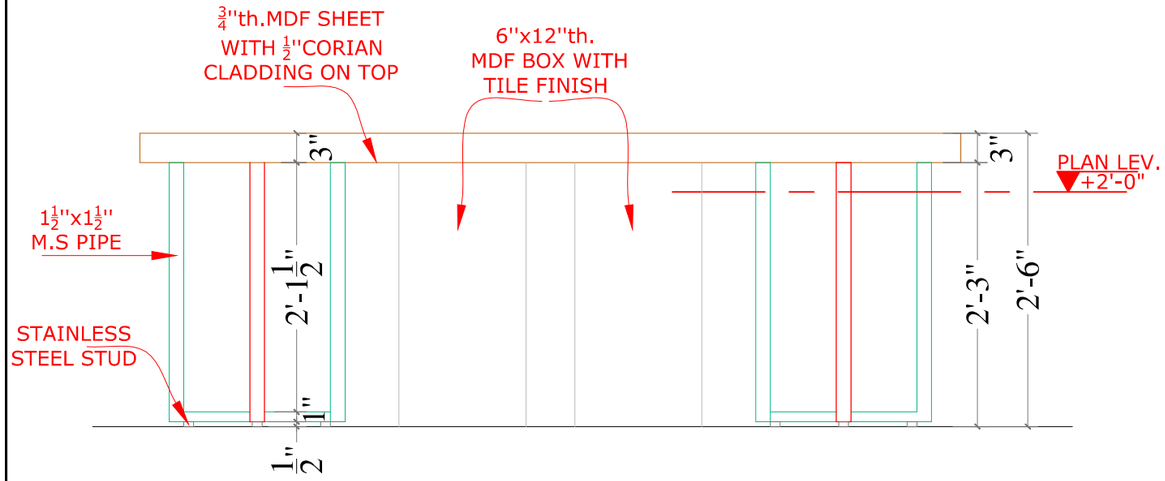

ELEVATION -01

SCALE ½"=1'- 0"

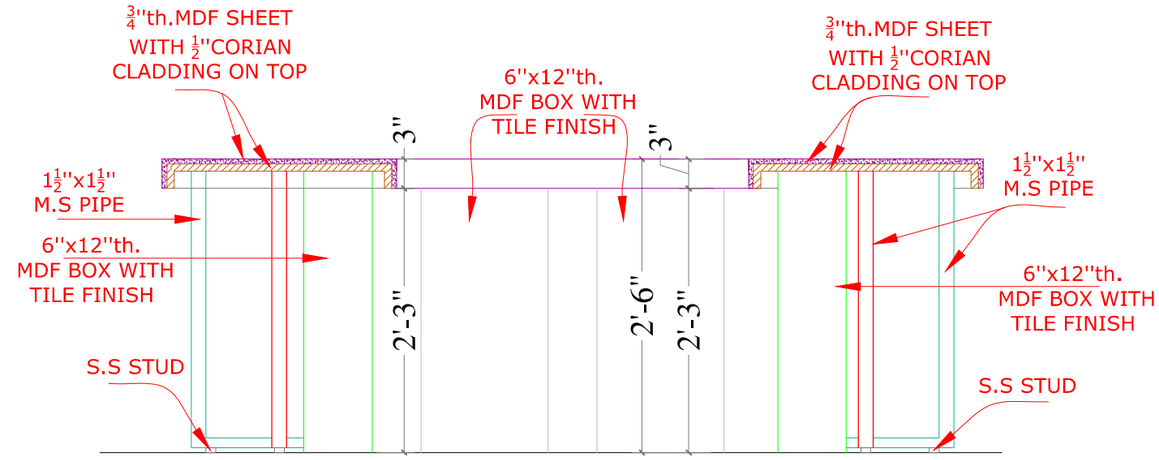

SECTION -'A'

SCALE ½"=1'- 0"

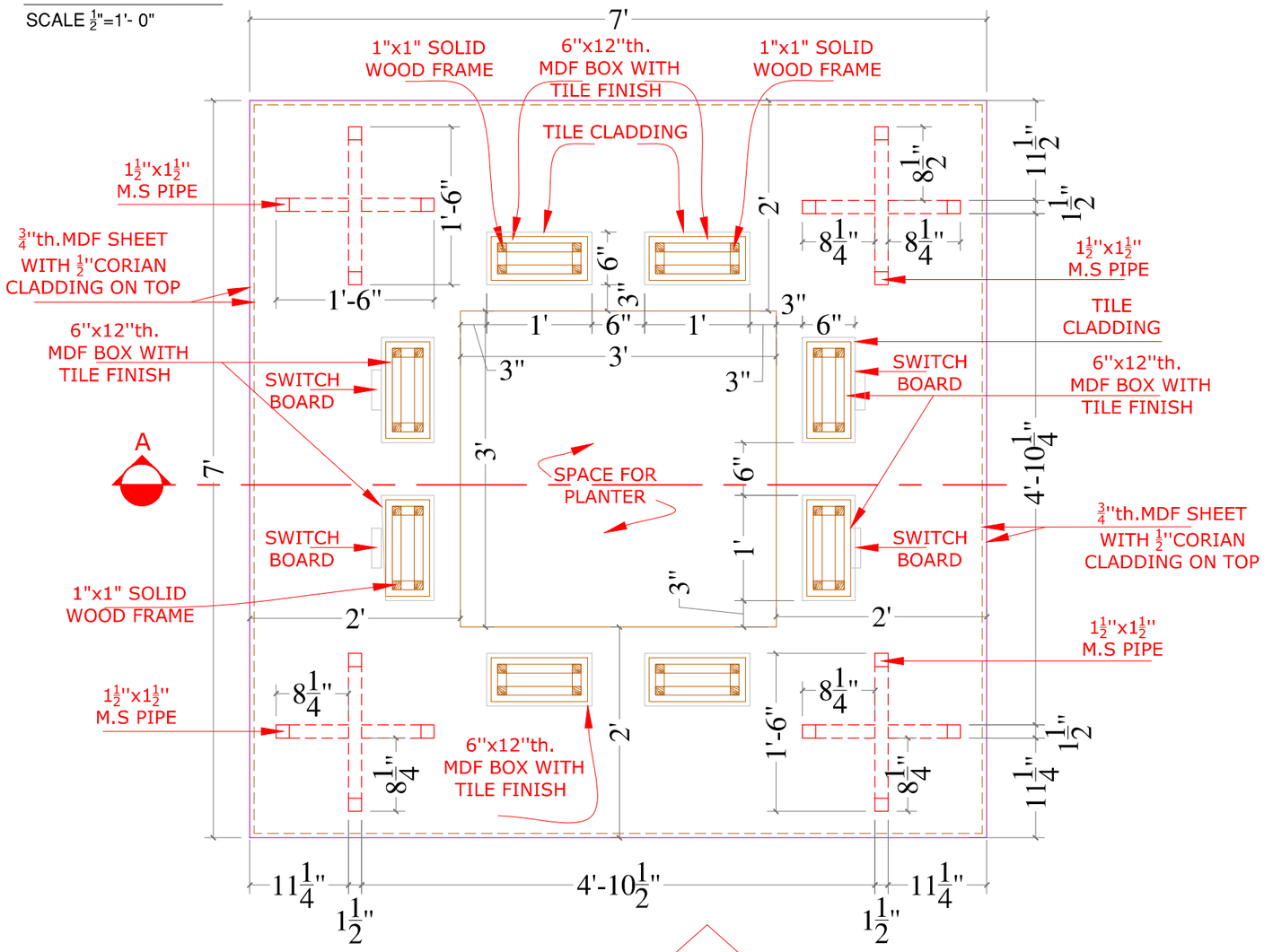

INCORPORATION TABLE

SCALE ½"=1'- 0"

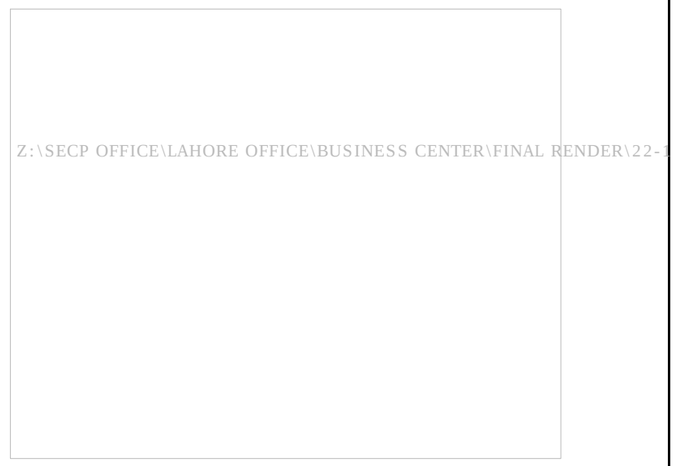

3D VIEW

REV.	DATE	DESCRIPTION	BY	CHD	APP

CLIENT
SECURITIES AND EXCHANGE COMMISSION OF PAKISTAN

PROJECT
INTERIOR RENOVATION BUSINESS CENTER SECP CR0 3RD FLOOR LAHORE

DESIGN PHASE
TENDER DRAWINGS

TITLE
INCORPORATION TABLE DETAIL

DESIGN	DRAWN	SCALE
SHAZIA QURESHI	WASIM BUTT	AS SHOWN
CHECKED	APPROVED	DATE
SHAZIA QURESHI	SHAZIA QURESHI	24 Dec, 2020
NORTH	JOB No. A- 2125	
	DRG. No. A-16	

CONSULTANT:
SOHAIL A. KHAN ASSOCIATES
Architecture and Designing
House #159, Street 4, Race Course Road, Rawalpindi
Tel: 5174329 - 5174098; Fax: 5125075
Email: mail@saka.net.pk

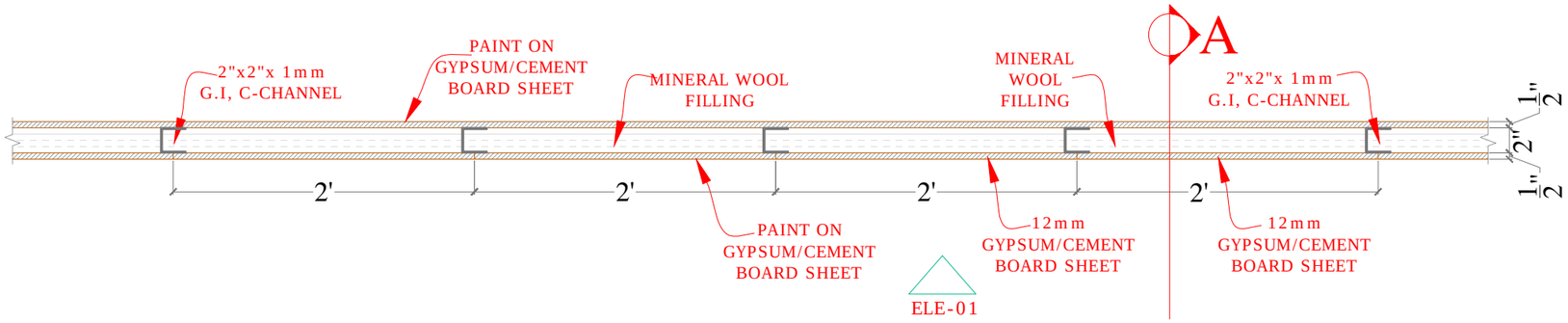

GYPSUM & CEMENT BOARD PARTITION TYPICAL PLAN

SCALE 3/8" = 1'-0"

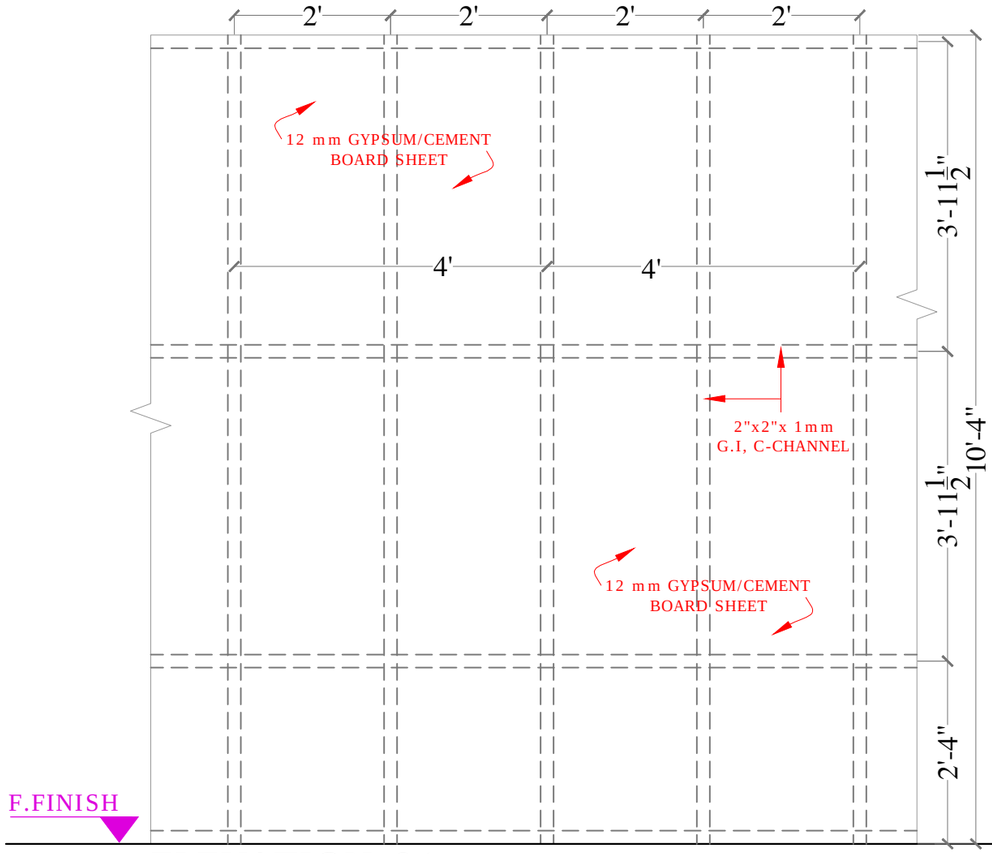

ELEVATION-01

SCALE 3/8" = 1'-0"

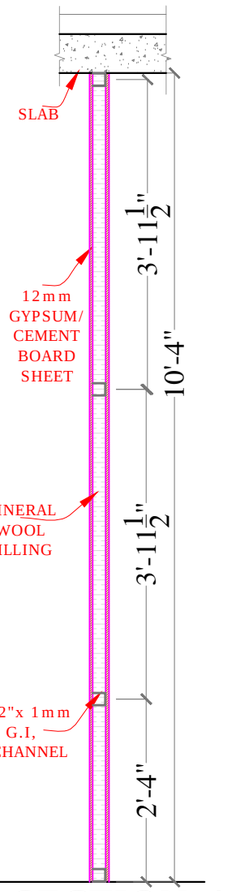

SECTION-A

SCALE 3/8" = 1'-0"

REV.	DATE	DESCRIPTION	BY	CHD	APP

CLIENT
SECURITIES AND EXCHANGE COMMISSION OF PAKISTAN

PROJECT
INTERIOR RENOVATION BUSINESS CENTER SECP CRO 3RD FLOOR LAHORE

DESIGN PHASE
TENDER DRAWINGS

TITLE
GYPSUM & CEMENT BOARD PARTITION DETAIL

DESIGN	DRAWN	SCALE
SHAZIA QURESHI	WASIM BUTT	AS SHOWN
CHECKED	APPROVED	DATE
SHAZIA QURESHI	SHAZIA QURESHI	24 Dec, 2020
NORTH	JOB No. A- 2125	
	DRG. No. A-17	

CONSULTANT:
SOHAIL A. KHAN ASSOCIATES
Architecture and Designing
House #159, Street 4, Race Course Road, Rawalpindi
Tel: 5174329 - 5174098; Fax: 5125075
Email: mail@saka.net.pk

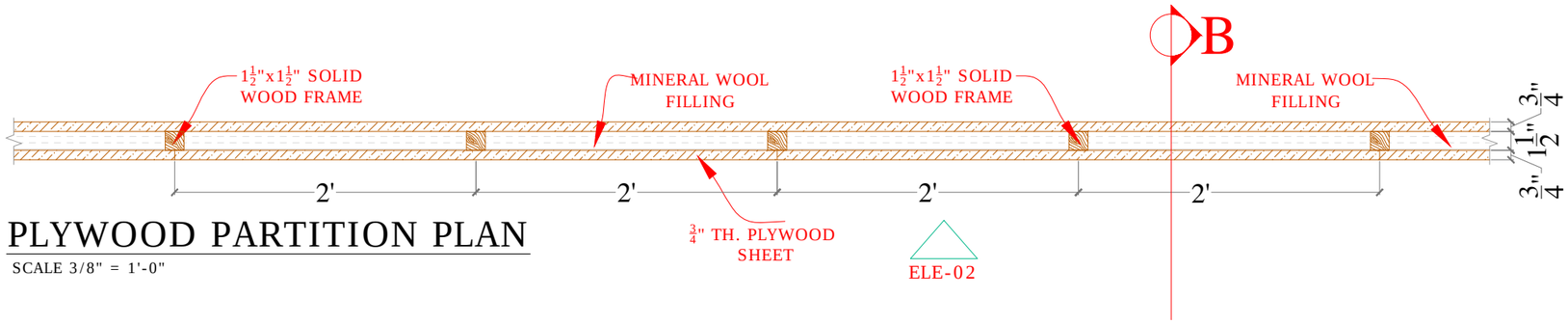

PLYWOOD PARTITION PLAN

SCALE 3/8" = 1'-0"

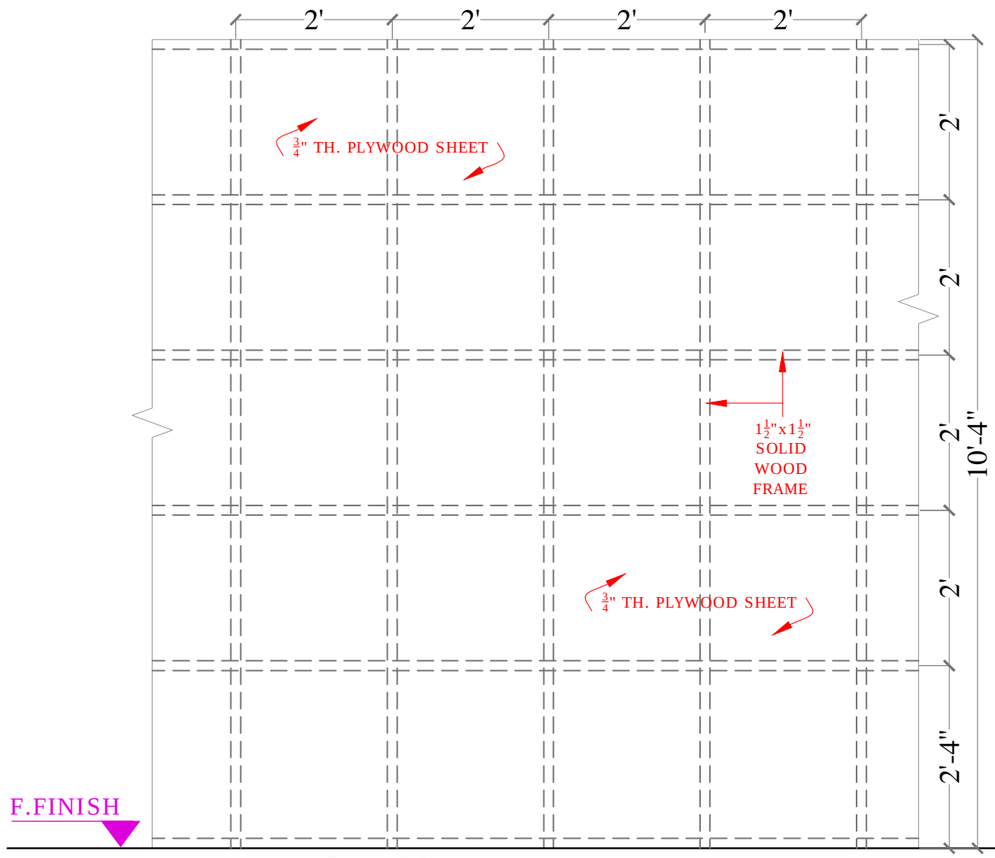

ELEVATION-02

SCALE 3/8" = 1'-0"

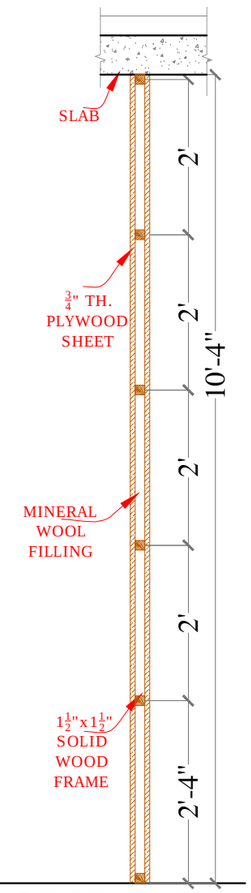

SECTION-B

SCALE 3/8" = 1'-0"

REV.	DATE	DESCRIPTION	BY	CHD	APP

CLIENT
SECURITIES AND EXCHANGE COMMISSION OF PAKISTAN

PROJECT
INTERIOR RENOVATION BUSINESS CENTER SECP CRO 3RD FLOOR LAHORE

DESIGN PHASE
TENDER DRAWINGS

TITLE
PLYWOOD PARTITION DETAIL

DESIGN	DRAWN	SCALE
SHAZIA QURESHI	WASIM BUTT	AS SHOWN
CHECKED	APPROVED	DATE
SHAZIA QURESHI	SHAZIA QURESHI	24 Dec, 2020
NORTH	JOB No. A- 2125	
	DRG. No. A-18	

CONSULTANT:
SOHAIL A. KHAN ASSOCIATES
Architecture and Designing
House #159, Street 4, Race Course Road, Rawalpindi
Tel: 5174329 - 5174098; Fax: 5125075
Email: mail@saka.net.pk

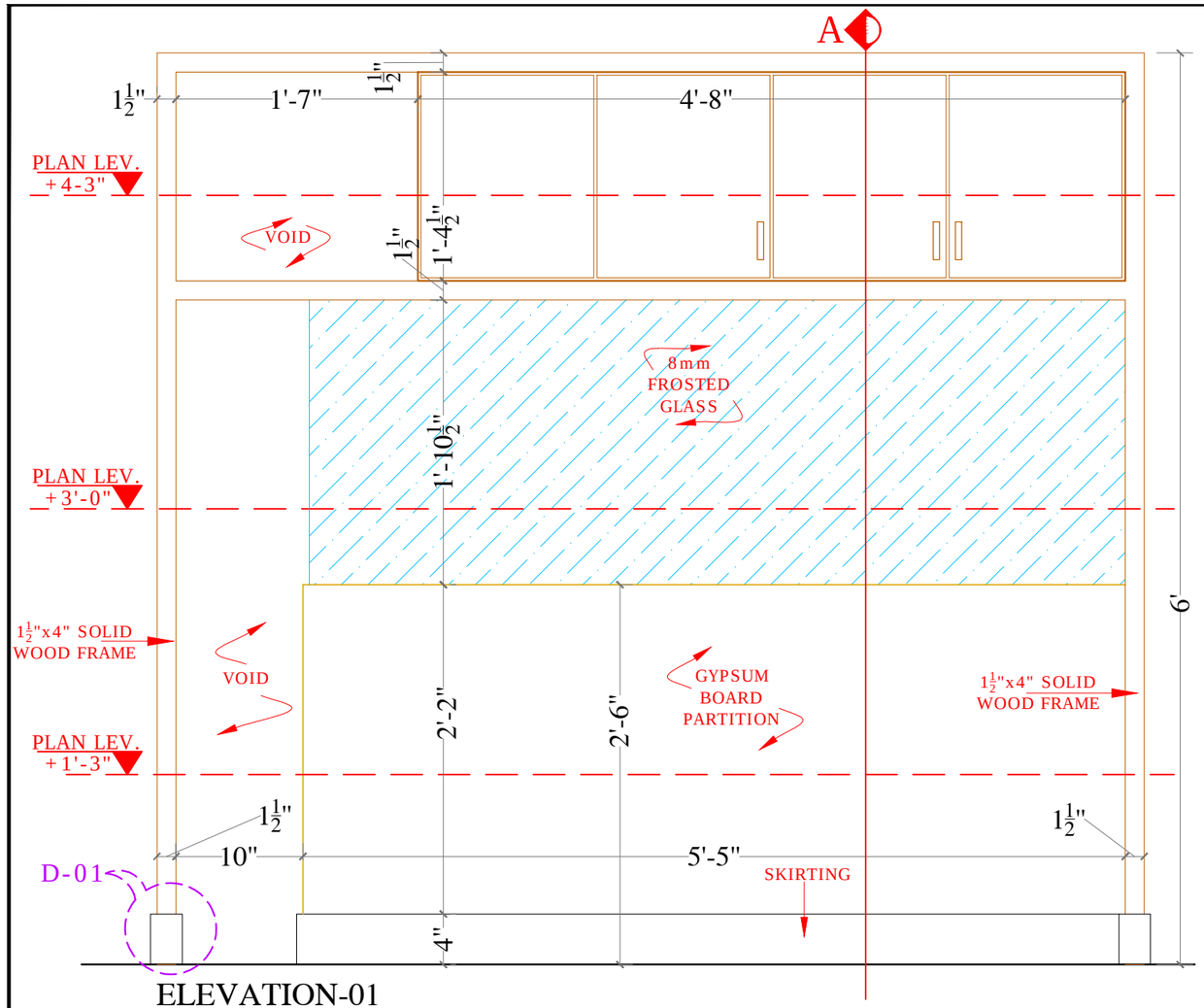

ELEVATION-01

SCALE , 1" = 1'-0"

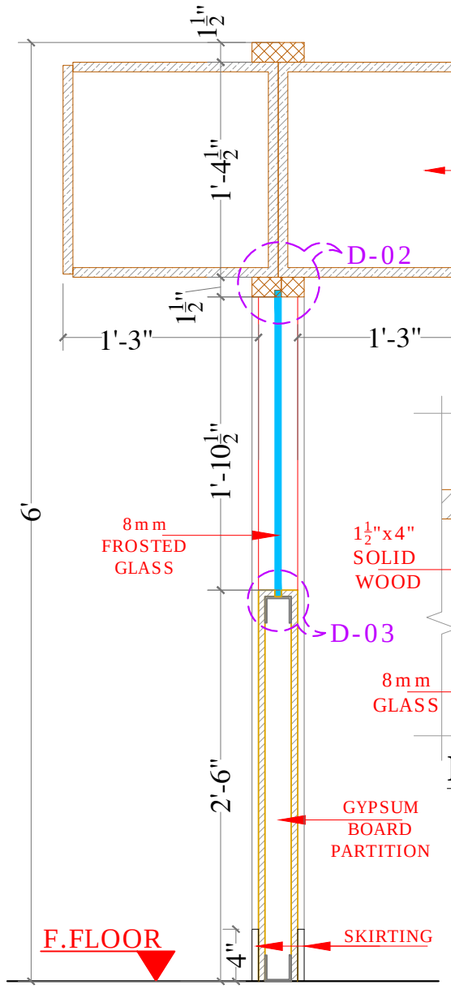

SECTION AT 'A-A'

SCALE , 1" = 1'-0"

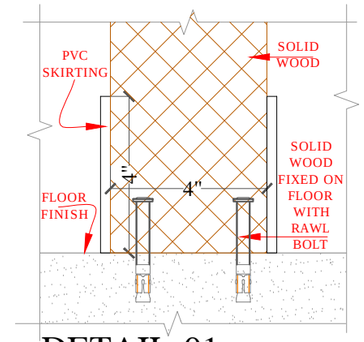

DETAIL-01

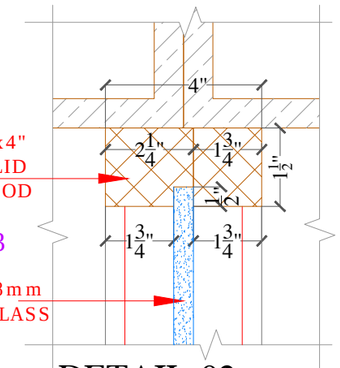

DETAIL-02

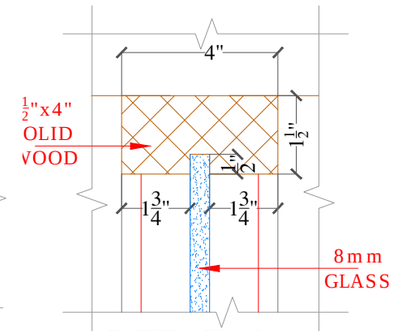

DETAIL-2a

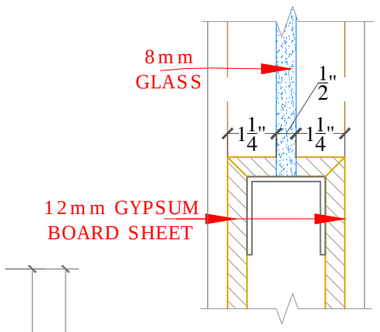

DETAIL-03

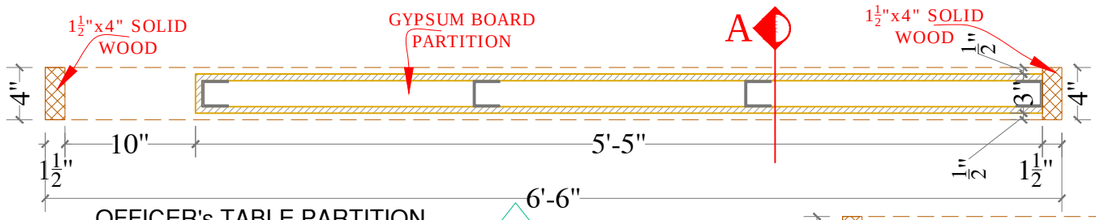

OFFICER's TABLE PARTITION PLAN AT + 1'-3"

SCALE ,1" = 1'-0"

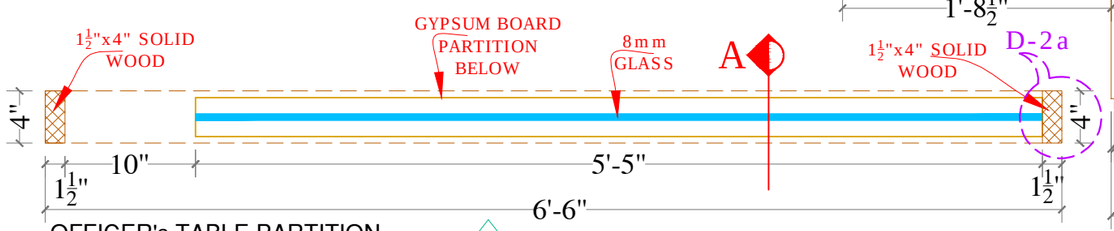

OFFICER's TABLE PARTITION PLAN AT +3'-0"

SCALE ,1" = 1'-0"

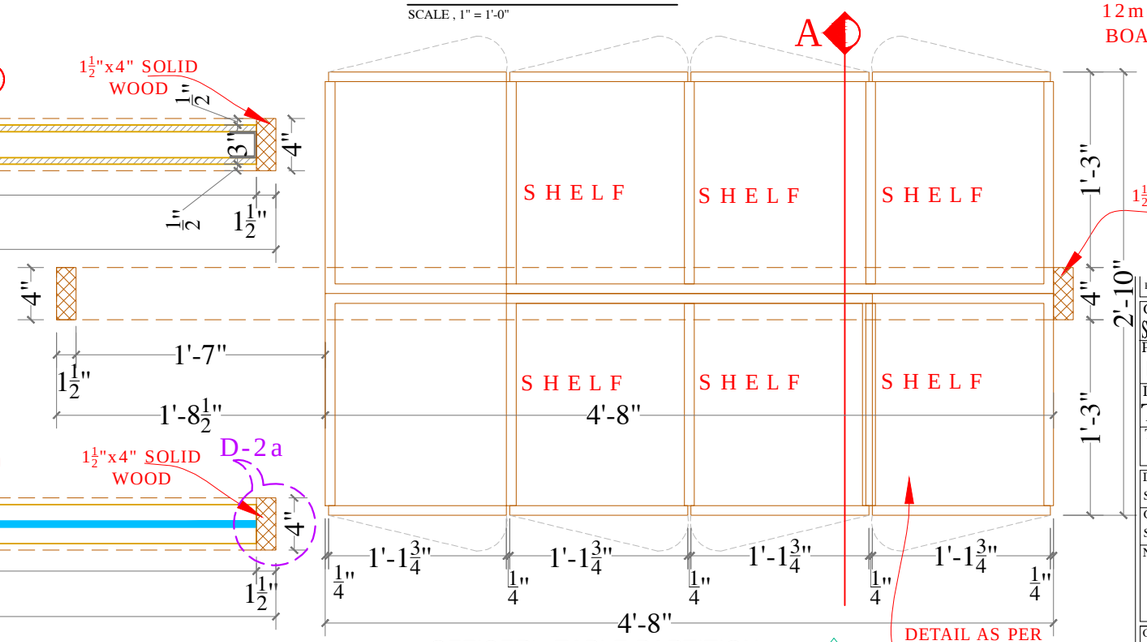

OFFICER's TABLE PARTITION PLAN AT +4'-3"

SCALE ,1" = 1'-0"

REV.	DATE	DESCRIPTION	BY	CHD	APP

CLIENT
SECURITIES AND EXCHANGE COMMISSION OF PAKISTAN

PROJECT
INTERIOR RENOVATION BUSINESS CENTER SECP CRO 3RD FLOOR LAHORE

DESIGN PHASE
TENDER DRAWINGS

TITLE
OFFICERS TABLE PARTITION DETAIL

DESIGN	DRAWN	SCALE
SHAZIA QURESHI	WASIM BUTT	AS SHOWN
CHECKED	APPROVED	DATE
SHAZIA QURESHI	SHAZIA QURESHI	24 Dec, 2020
NORTH	JOB No.	A- 2125
	DRG. No.	A-19

CONSULTANT:
SOHAIL A. KHAN ASSOCIATES
Architecture and Designing
House #159, Street 4, Race Course Road, Rawalpindi
Tel: 5174329 - 5174098; Fax: 5125075
Email: mail@saka.net.pk

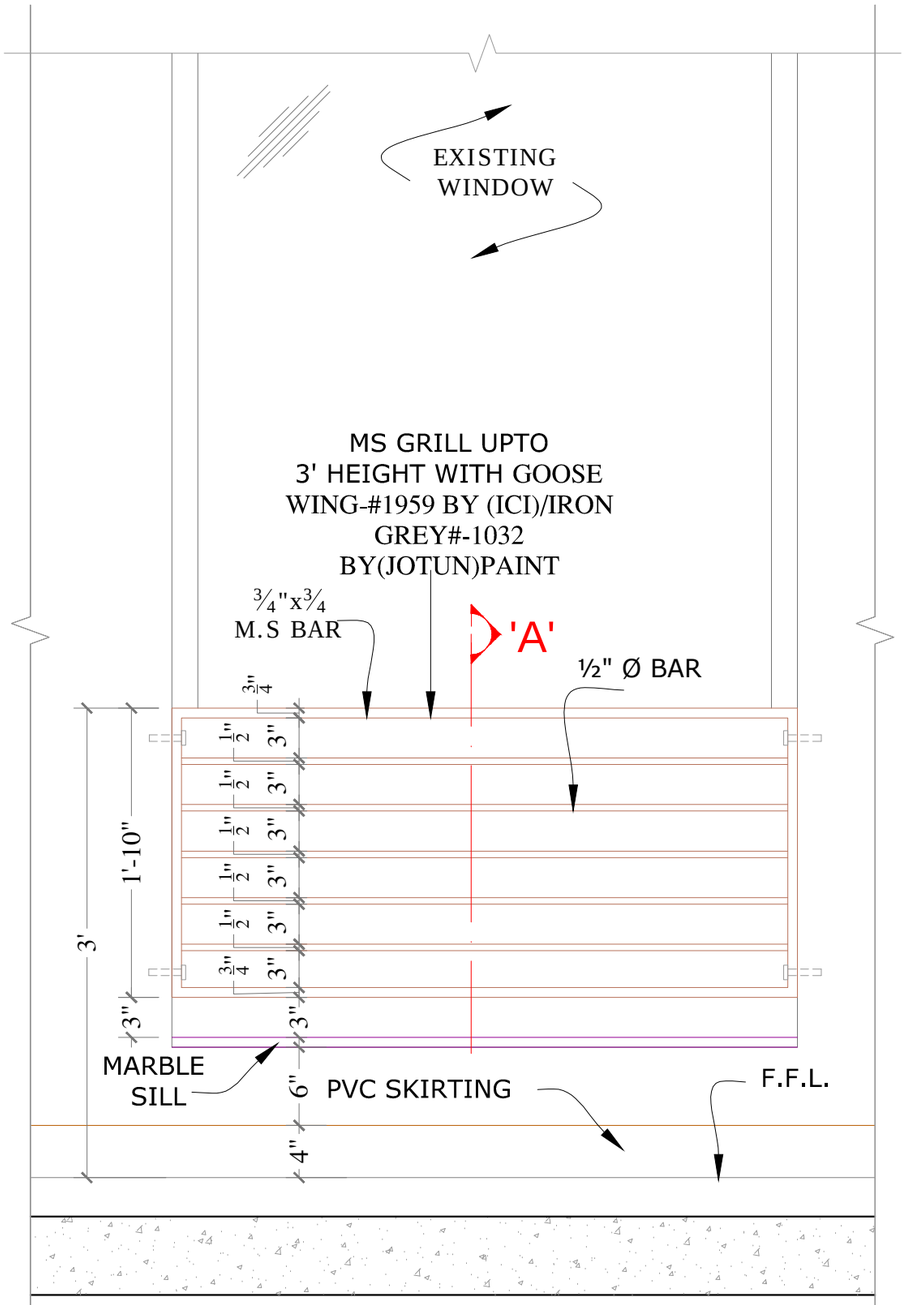

GRILL ELEVATION

SCALE, 1"-1'-0"

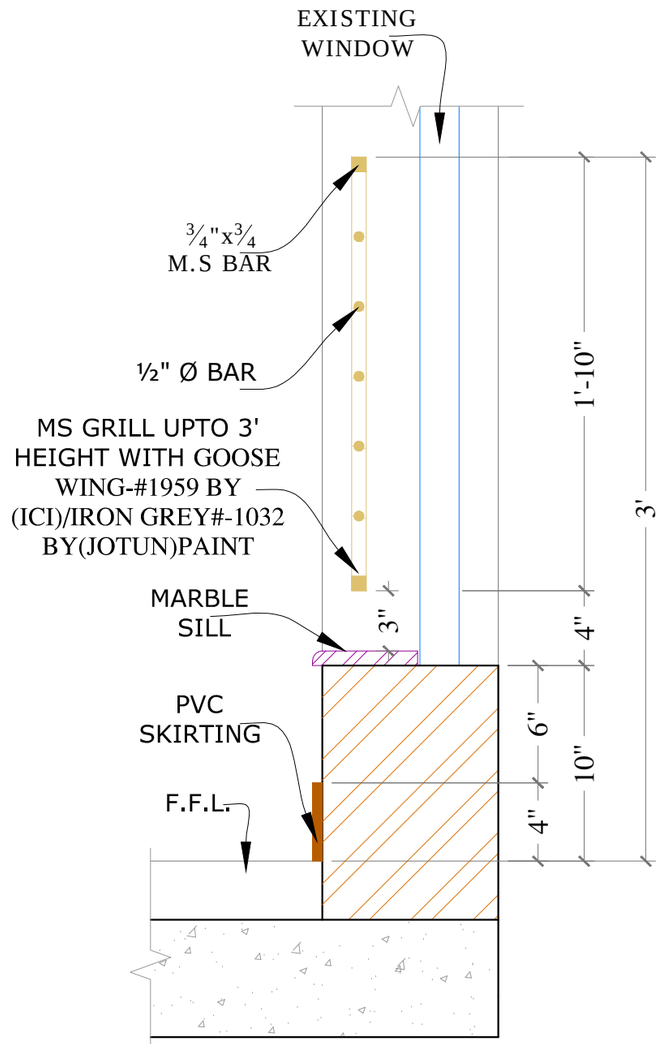

SECTION -A

SCALE, $1\frac{1}{2}$"-1'-0"

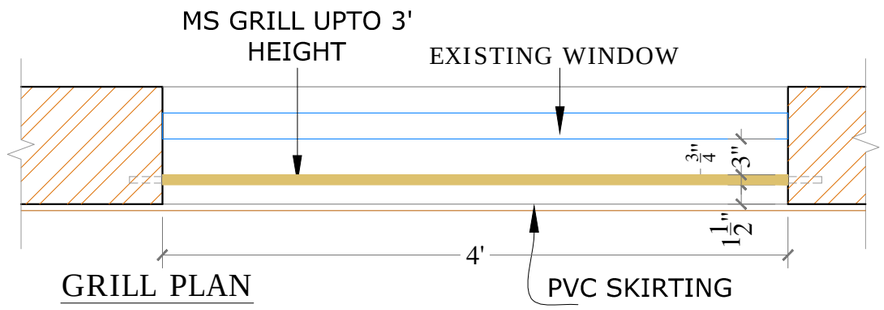

GRILL PLAN

SCALE, 1"-1'-0"

REV.	DATE	DESCRIPTION	BY	CHD	APP

CLIENT
SECURITIES AND EXCHANGE COMMISSION OF PAKISTAN

PROJECT
INTERIOR RENOVATION 3RD FLOOR BUSINESS CENTER LAHORE

DESIGN PHASE
TENDER DRAWINGS

TITLE
WINDOWS GRILL PLAN SECTION & ELEVATION

DESIGN	DRAWN	SCALE
SHAZIA QURESHI	WASIM BUTT	AS SHOWN
CHECKED	APPROVED	DATE
SHAZIA QURESHI	SHAZIA QURESHI	24 Dec, 2020
NORTH	JOB No.	A- 2125
	DRG. No.	A-20

CONSULTANT:
SOHAIL A. KHAN ASSOCIATES
Architecture and Designing
House #159, Street 4, Race Course Road, Rawalpindi
Tel: 5174329 - 5174098; Fax: 5125075
Email: mail@saka.net.pk

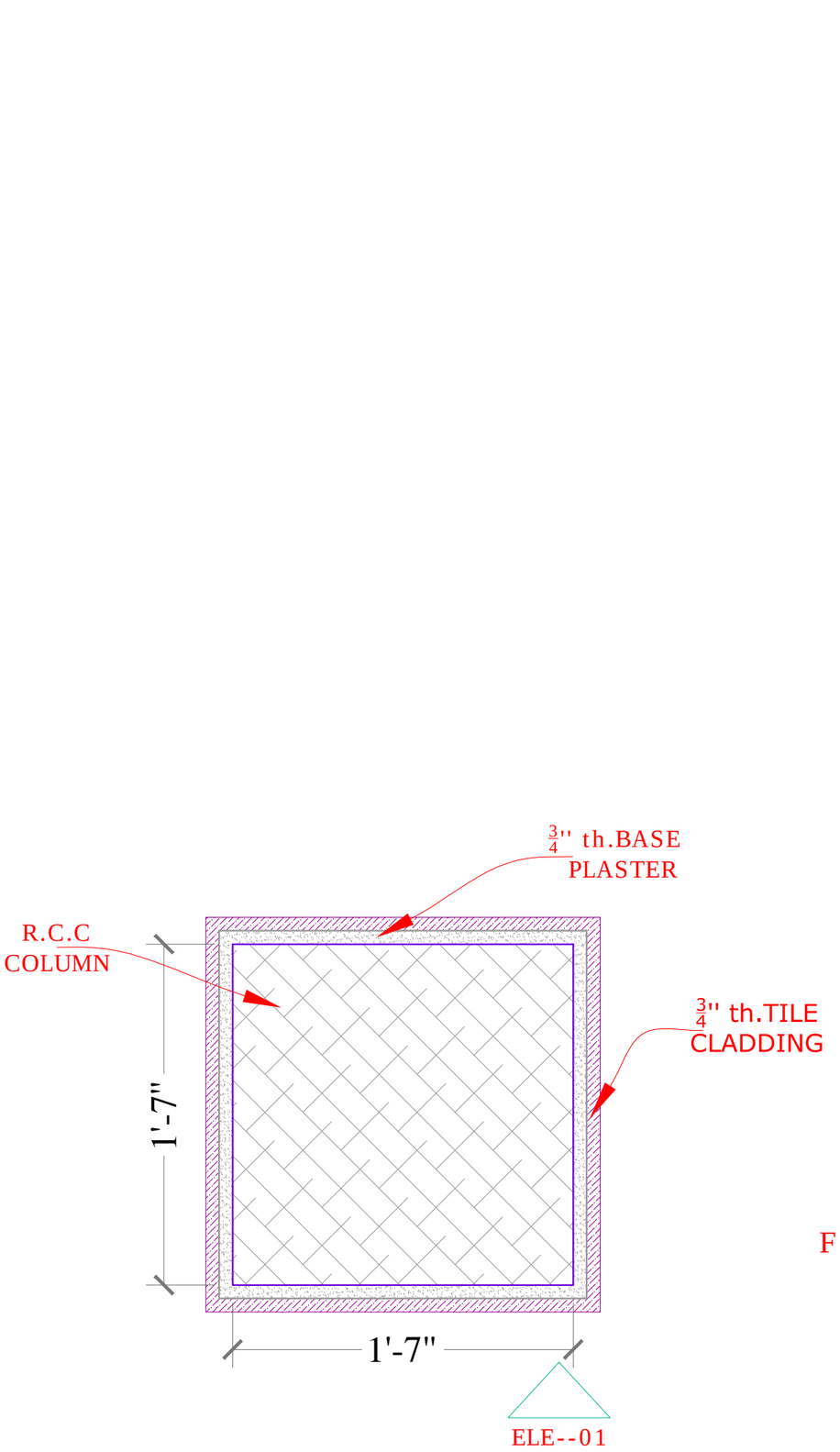

TYPICAL DETAIL OF GRANITE CLADDING ON COLUMN

SCALE 1"=1'- 0"

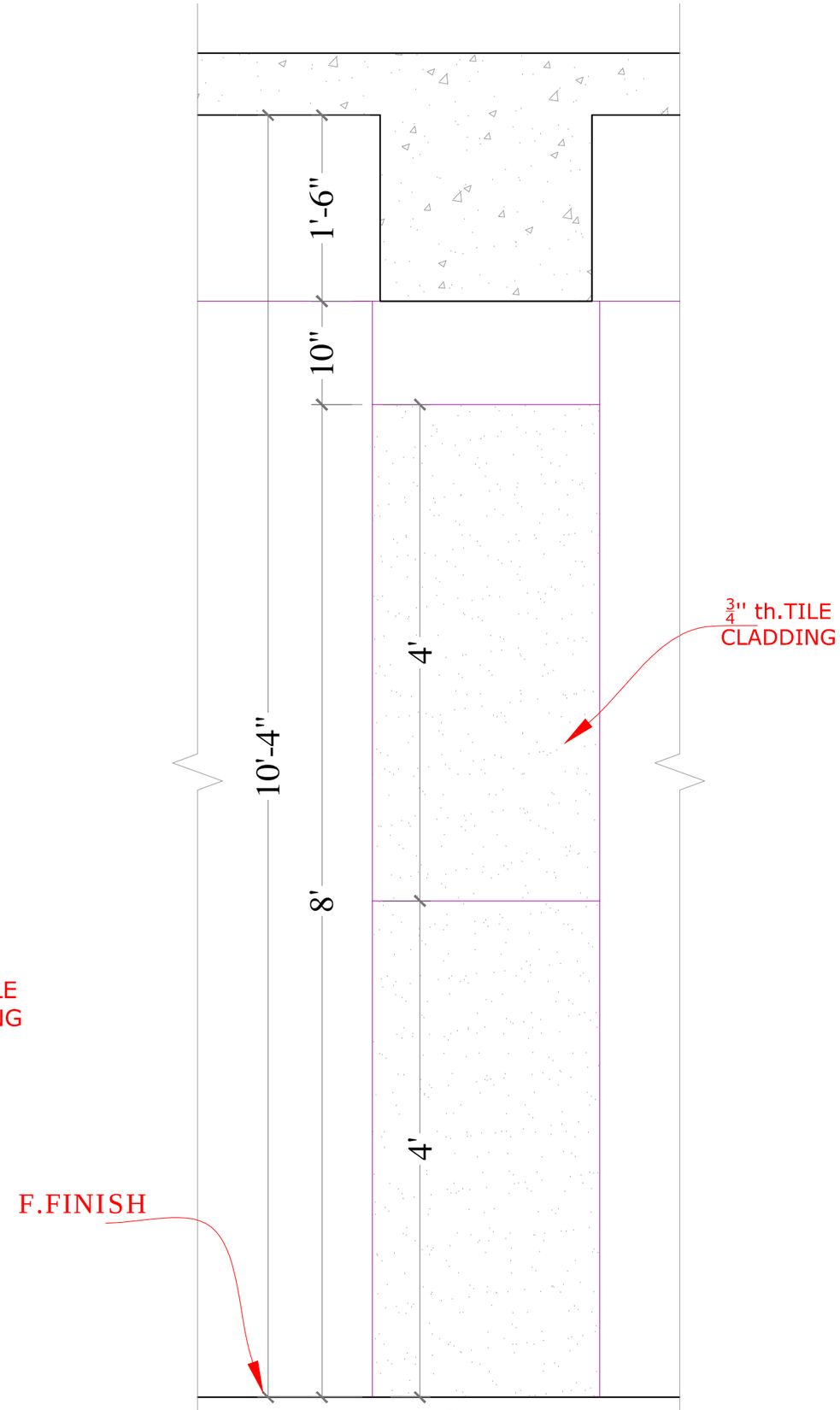

ELEVATION-01

SCALE ¾"=1'- 0"

REV.	DATE	DESCRIPTION	BY	CHD	APP

CLIENT
SECURITIES AND EXCHANGE COMMISSION OF PAKISTAN

PROJECT
INTERIOR RENOVATION 3RD FLOOR BUSINESS CENTER LAHORE

DESIGN PHASE
TENDER DRAWINGS

TITLE
TYPICAL DETAIL FOR COLUMN

DESIGN	DRAWN	SCALE
SHAZIA QURESHI	WASIM BUTT	AS SHOWN
CHECKED	APPROVED	DATE
SHAZIA QURESHI	SHAZIA QURESHI	24 Dec, 2020
NORTH	JOB No. A- 2125	
	DRG. No. A-21	

CONSULTANT:

SOHAIL A. KHAN ASSOCIATES
Architecture and Designing
House #159, Street 4, Race Course Road, Rawalpindi
Tel: 5174329 - 5174098; Fax: 5125075
Email: mail@saka.net.pk

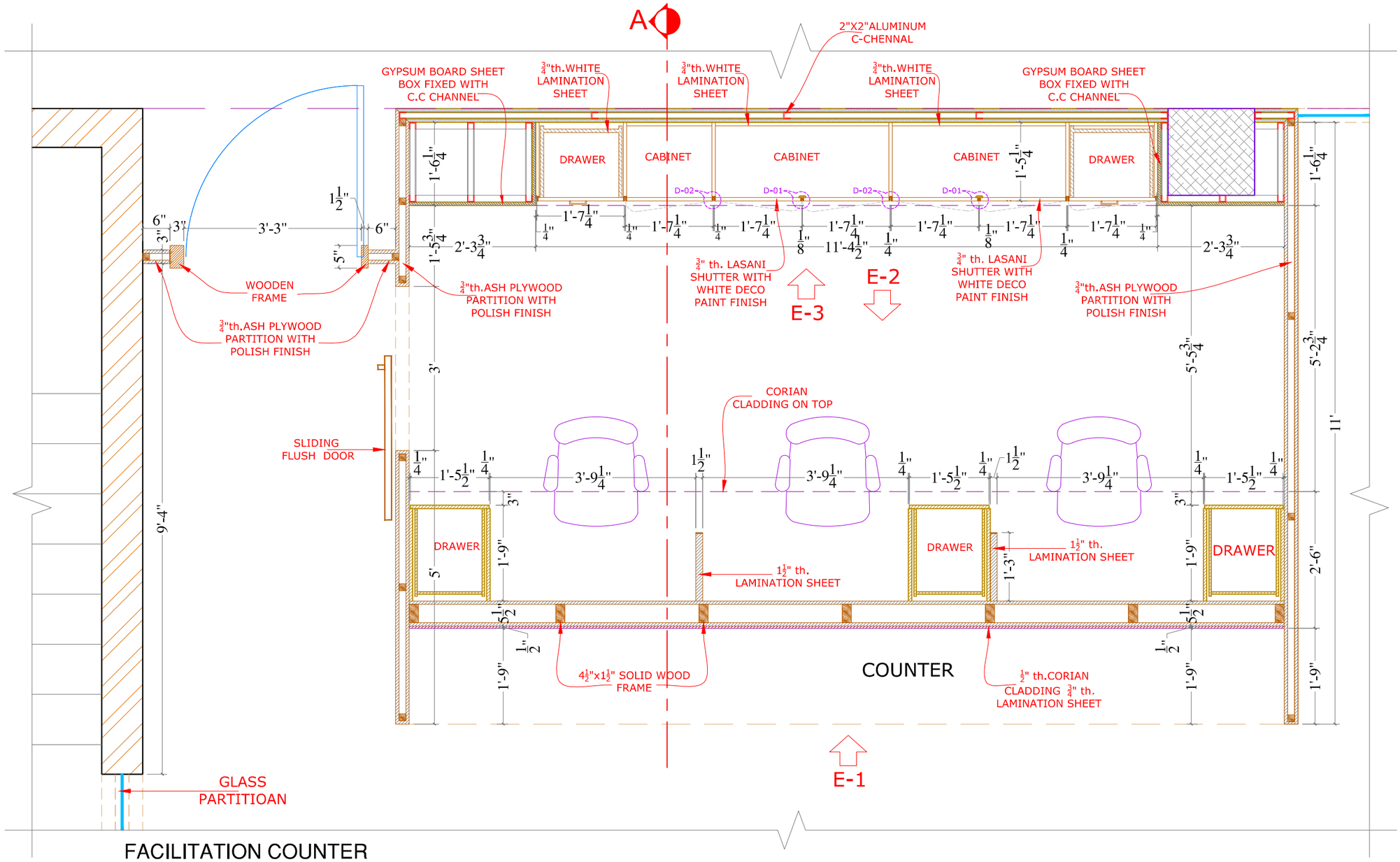

FACILITATION COUNTER
MEETING ROOM-01 DETAIL PLAN

SCALE, 1/2" = 1'-0"

REV.	DATE	DESCRIPTION	BY	CHD	APP

CLIENT
SECURITIES AND EXCHANGE COMMISSION OF PAKISTAN

PROJECT
INTERIOR RENOVATION BUSINESS CENTER SECP CR0 3RD FLOOR LAHORE

DESIGN PHASE
TENDER DRAWINGS

TITLE
FACILITATION COUNTER AND LOW HEIGHT FILE CABINET DETAIL

DESIGN	DRAWN	SCALE
SHAZIA QURESHI	WASIM BUTT	AS SHOWN
CHECKED	APPROVED	DATE
SHAZIA QURESHI	SHAZIA QURESHI	24 Dec,2020
NORTH	JOB No. A- 2125	
	DRG. No. A-22	

CONSULTANT:
SOHAIL A. KHAN ASSOCIATES
Architecture and Designing
House #159, Street 4, Race Course Road, Rawalpindi
Tel: 5174329 - 5174098; Fax: 5125075
Email: mail@saka.net.pk

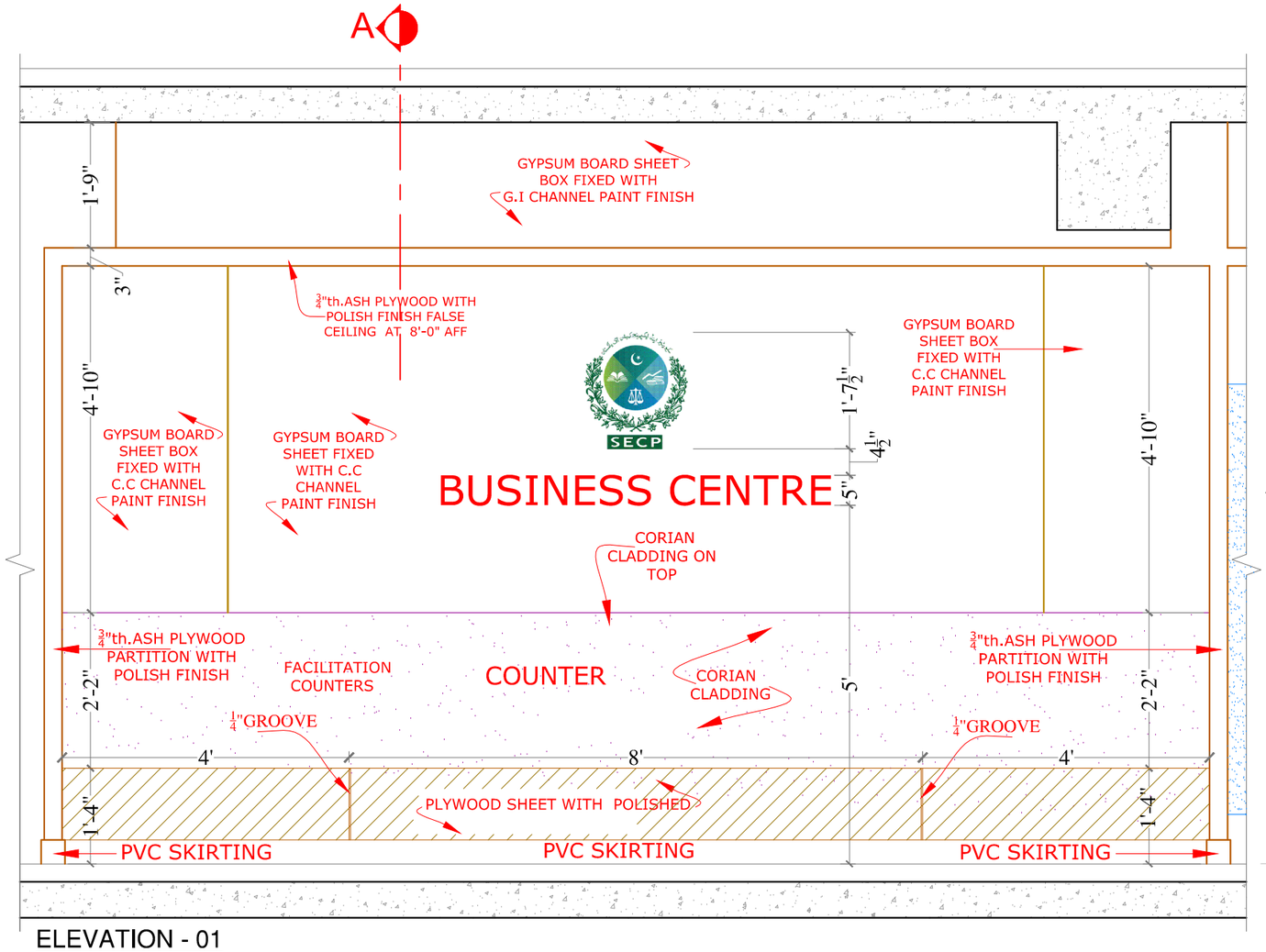

ELEVATION - 01

SCALE ½"=1'- 0"

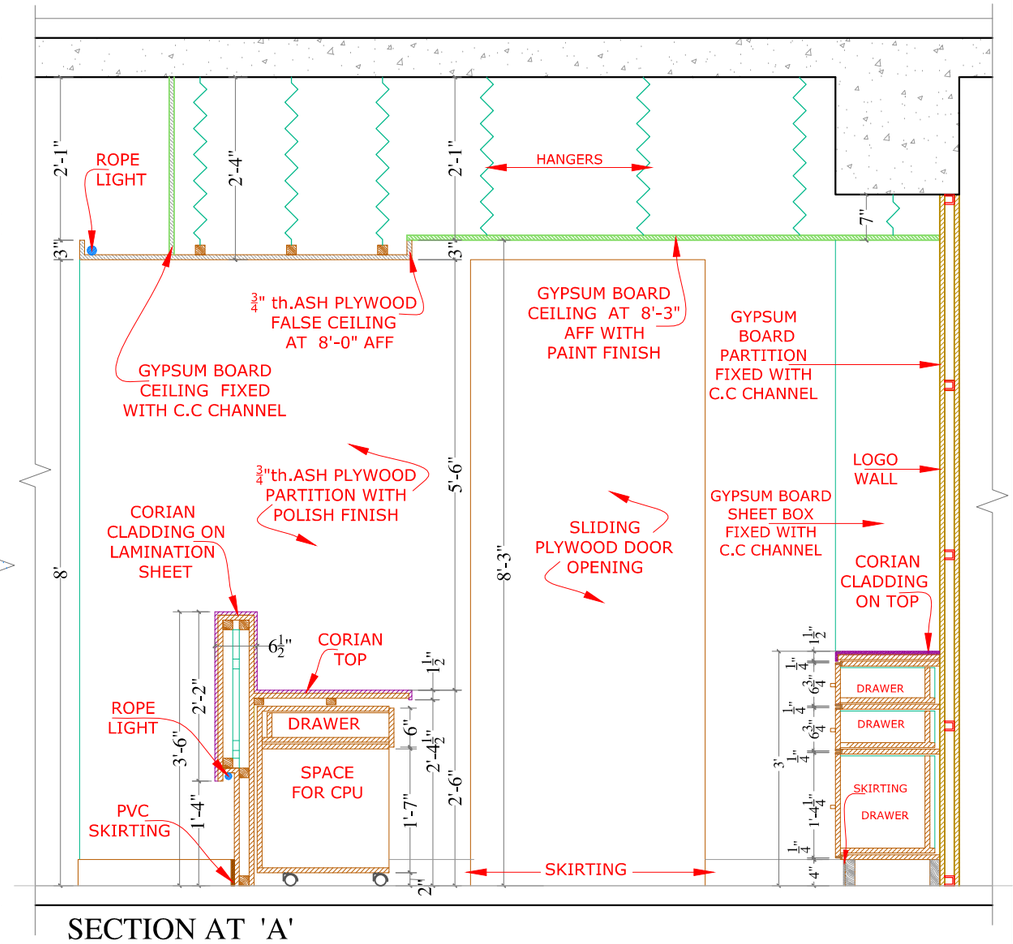

SECTION AT 'A'

SCALE,1/2"=1'-0"

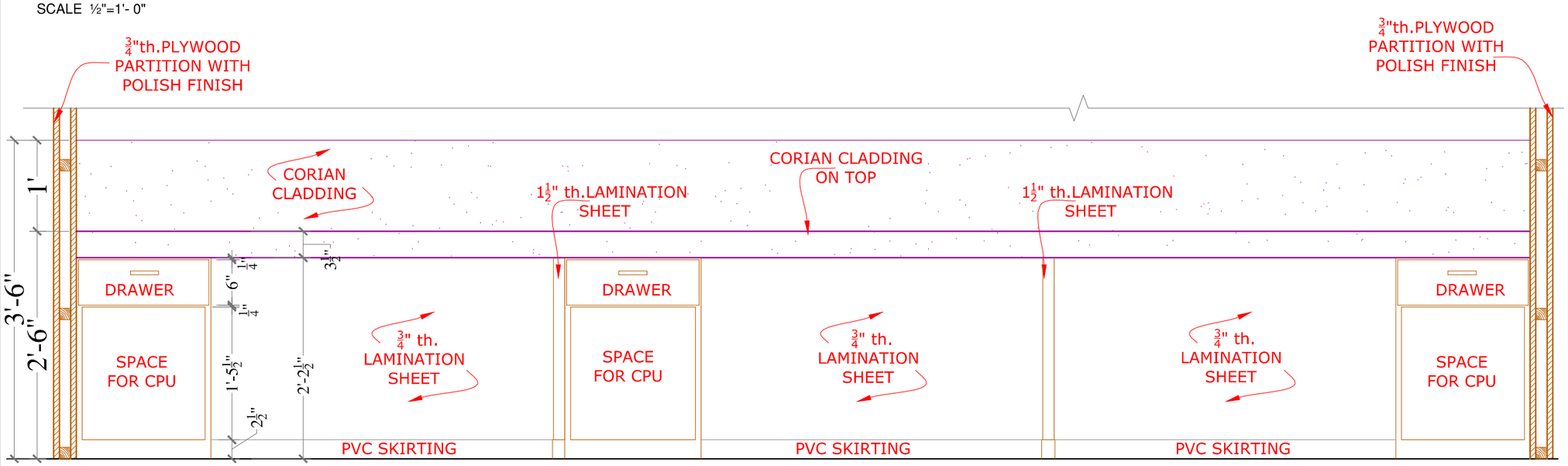

ELEVATION-02

SCALE, 3/4" = 1'-0"

REV.	DATE	DESCRIPTION	BY	CHD	APP

CLIENT
SECURITIES AND EXCHANGE COMMISSION OF PAKISTAN

PROJECT
INTERIOR RENOVATION BUSINESS CENTER SECP CR0 3RD FLOOR LAHORE

DESIGN PHASE
TENDER DRAWINGS

TITLE
FACILITATION COUNTER AND LOW HEIGHT FILE CABINET DETAIL

DESIGN	DRAWN	SCALE
SHAZIA QURESHI	WASIM BUTT	AS SHOWN
CHECKED	APPROVED	DATE
SHAZIA QURESHI	SHAZIA QURESHI	24 Dec,2020
NORTH	JOB No. A- 2125	
	DRG. No. A-23	

CONSULTANT:
SOHAIL A. KHAN ASSOCIATES
Architecture and Designing
House #159, Street 4, Race Course Road, Rawalpindi
Tel: 5174329 - 5174098; Fax: 5125075
Email: mail@saka.net.pk

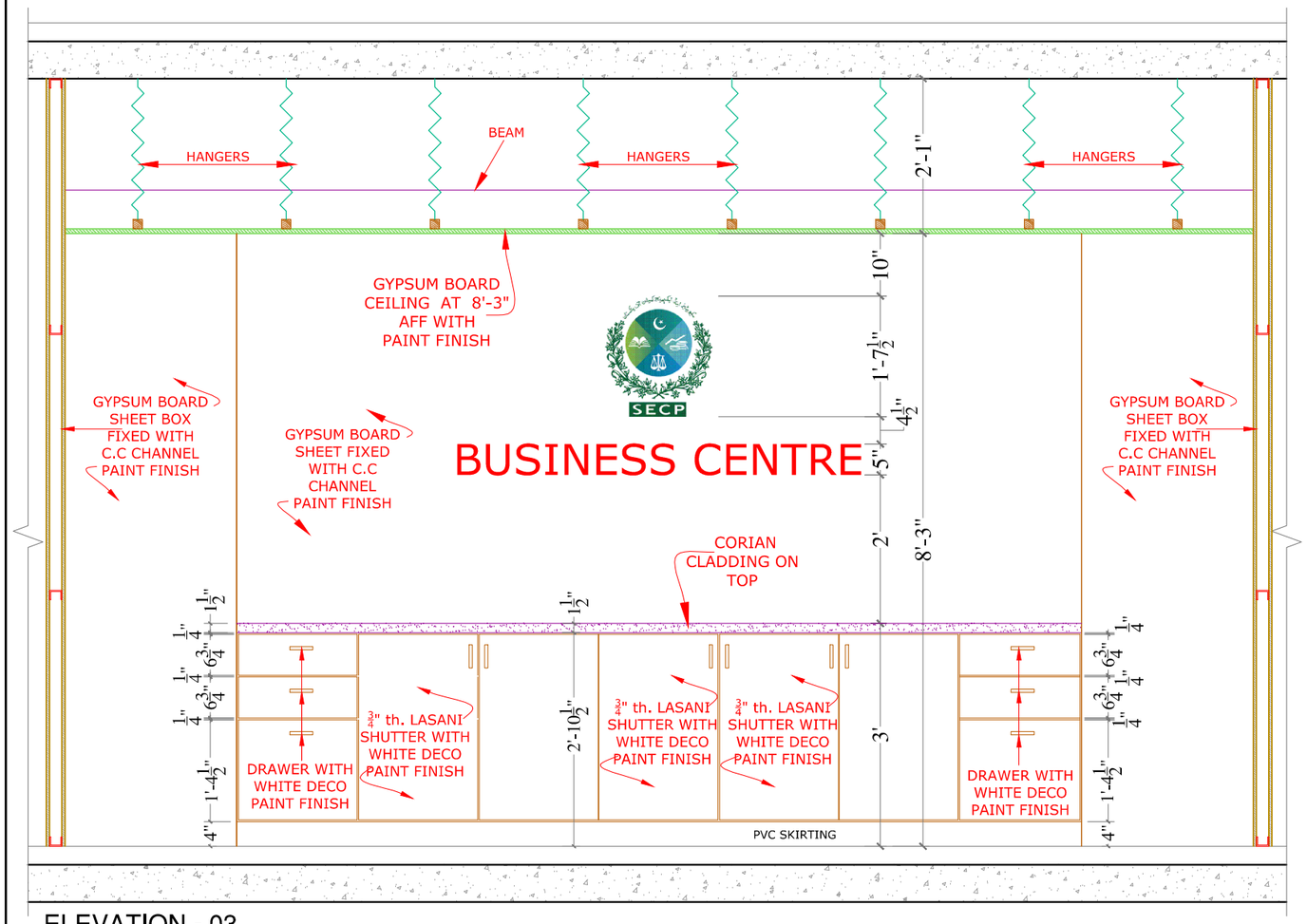

ELEVATION - 03

SCALE ½"=1'- 0"

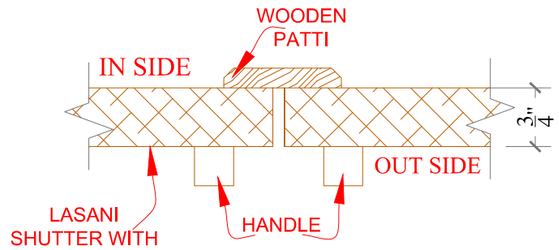

DETAIL-01

SCALE, 6"=1'-0"

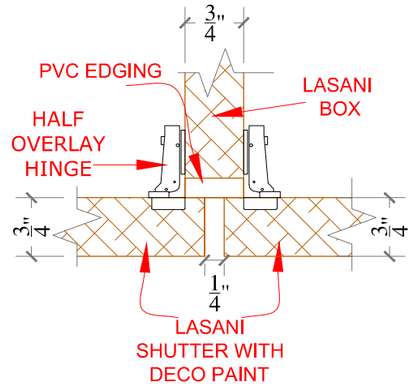

DETAIL-02

SCALE, 6"=1'-0"

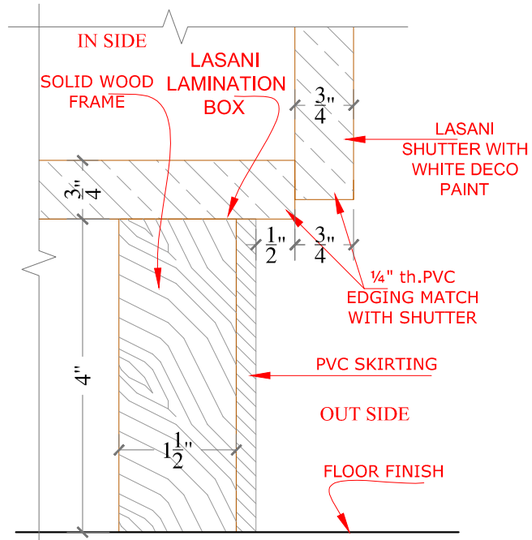

DETAIL-03

SCALE, 6"=1'-0"

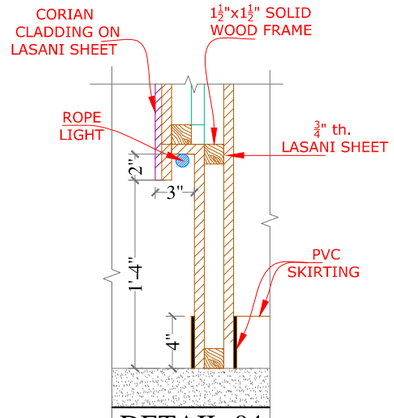

DETAIL-04

SCALE,1"=1'-0"

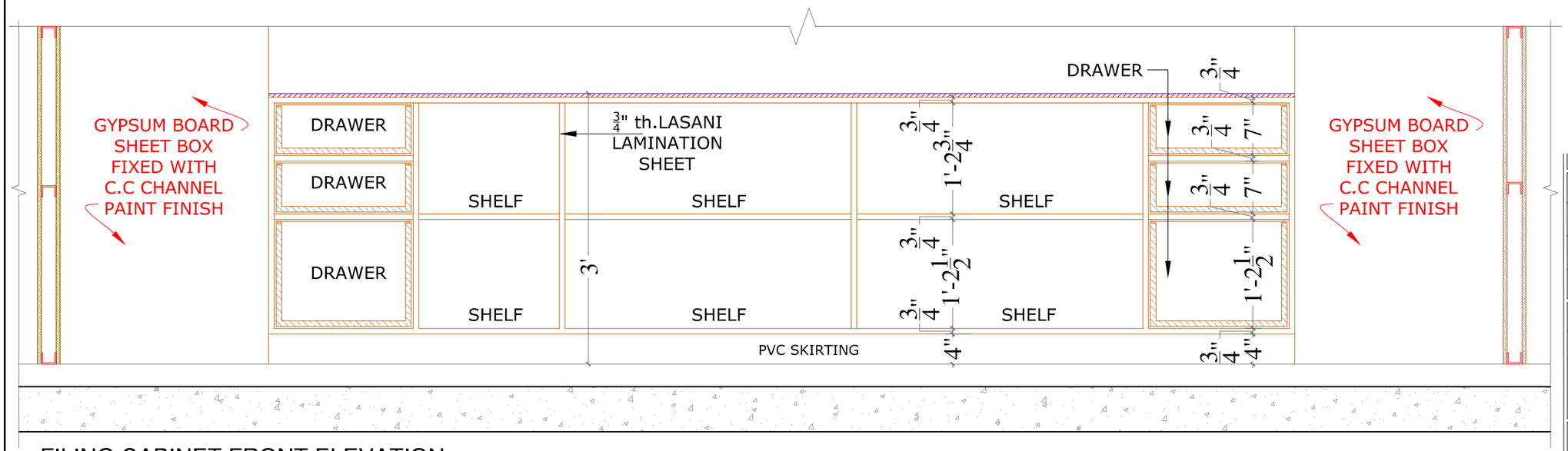

FILING CABINET FRONT ELEVATION

SCALE ¾"=1'- 0"

REV.	DATE	DESCRIPTION	BY	CHD	APP

CLIENT
SECURITIES AND EXCHANGE COMMISSION OF PAKISTAN

PROJECT
INTERIOR RENOVATION BUSINESS CENTER SECP CR0 3RD FLOOR LAHORE

DESIGN PHASE
TENDER DRAWINGS

TITLE
FACILITATION COUNTER AND LOW HEIGHT FILE CABINET DETAIL

DESIGN	DRAWN	SCALE
SHAZIA QURESHI	WASIM BUTT	AS SHOWN
CHECKED	APPROVED	DATE
SHAZIA QURESHI	SHAZIA QURESHI	24 Dec, 2020
NORTH	JOB No. A- 2125	
	DRG. No. A-24	

CONSULTANT:
SOHAIL A. KHAN ASSOCIATES
Architecture and Designing
House #159, Street 4, Race Course Road, Rawalpindi
Tel: 5174329 - 5174098; Fax: 5125075
Email: mail@saka.net.pk